SKOOKUM®

Since 1890

GENERAL CATALOG SK-10

ROPE MASTER
BLOCKS

ULVEN
Forgings

BCM
Blocks

Phone (503) 651-3175
Toll Free (800) 547-8211
Fax (503) 651-3409
www.skookumco.com

Since 1980

SKOOKUM®

TABLE OF CONTENTS

Skookum Cast Sided Blocks ..... pages 1-15

Skookum Trawl Blocks and
BCM Trawl Blocks ..... pages 16-21

Rope Master Cast Sided Blocks ..... pages 22-27

Hoisting Blocks ..... pages 28-29

Fairleads ..... pages 30-39

Sheaves ..... pages 40-45

Gold Standard Forgings ..... pages 46-51

Climbing Gear, Logging
Tools & Accessories ..... pages 52-54

Ulven Logging Forgings ..... pages 55-66

Conditions of Sales & Warranty: Inside Back Cover

SKOOKUM®

SINCE 1890

RS/SB

CAST SIDED BLOCKS

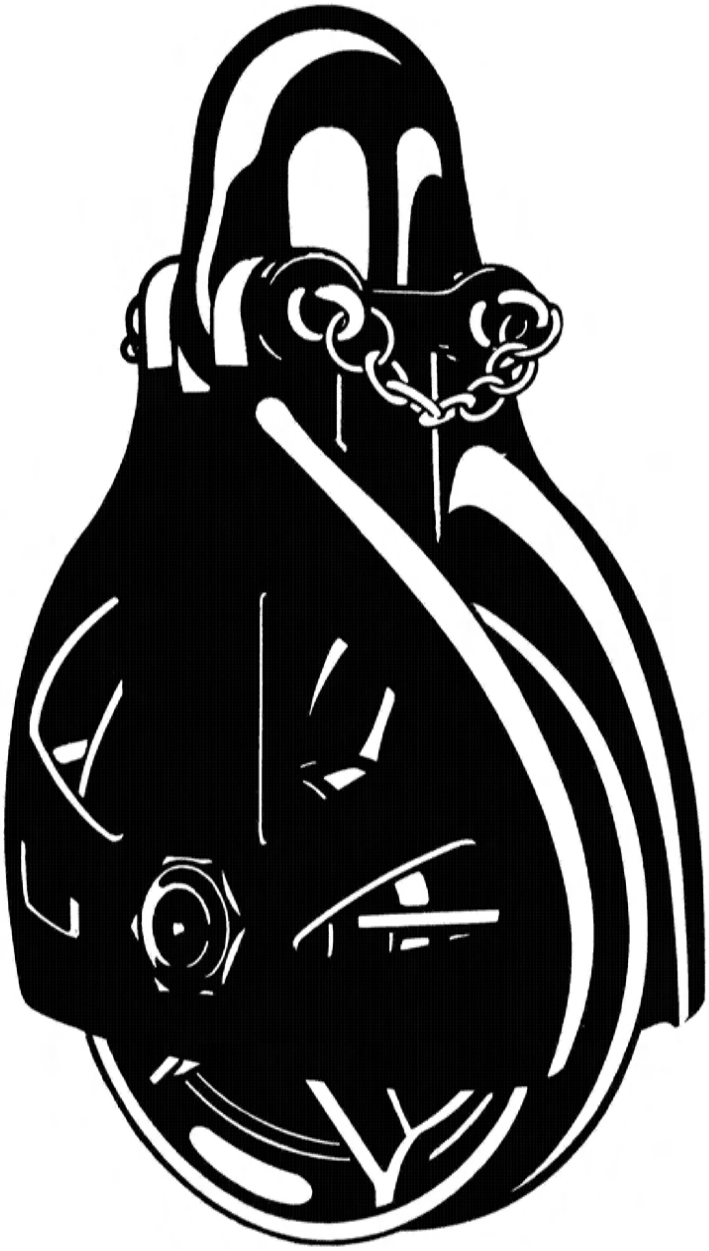

SKOOKUM

CAST SIDED BLOCKS

FEATURES:

- COMPACT DESIGN
- LIGHT WEIGHT
- EXCELLENT WEIGHT TO CAPACITY RATIO
- QUICK TAKE UP ON LINE
- EASY TO HANDLE
- RUGGED CONSTRUCTION
- LONG SERVICE LIFE
- EASY MAINTENANCE
- PARTS READILY AVAILABLE

APPLICATIONS:

- LOGGING
- CONSTRUCTION
- MARINE
- MINING
- OFF SHORE
- POWER LINE UTILITY
- CONTRACTORS
- TILT-UP CONSTRUCTION
- TOWING, ROAD
- TOWING, MARINE
- CONVEYOR SYSTEMS: GRAIN, ORE, ETC.

INSIDE SKOOKUM® BLOCKS

Most blocks presented in this catalog embody the design features described below. This "inside story" reveals why Skookum® blocks have a worldwide reputation for reliable performance on tough jobs.

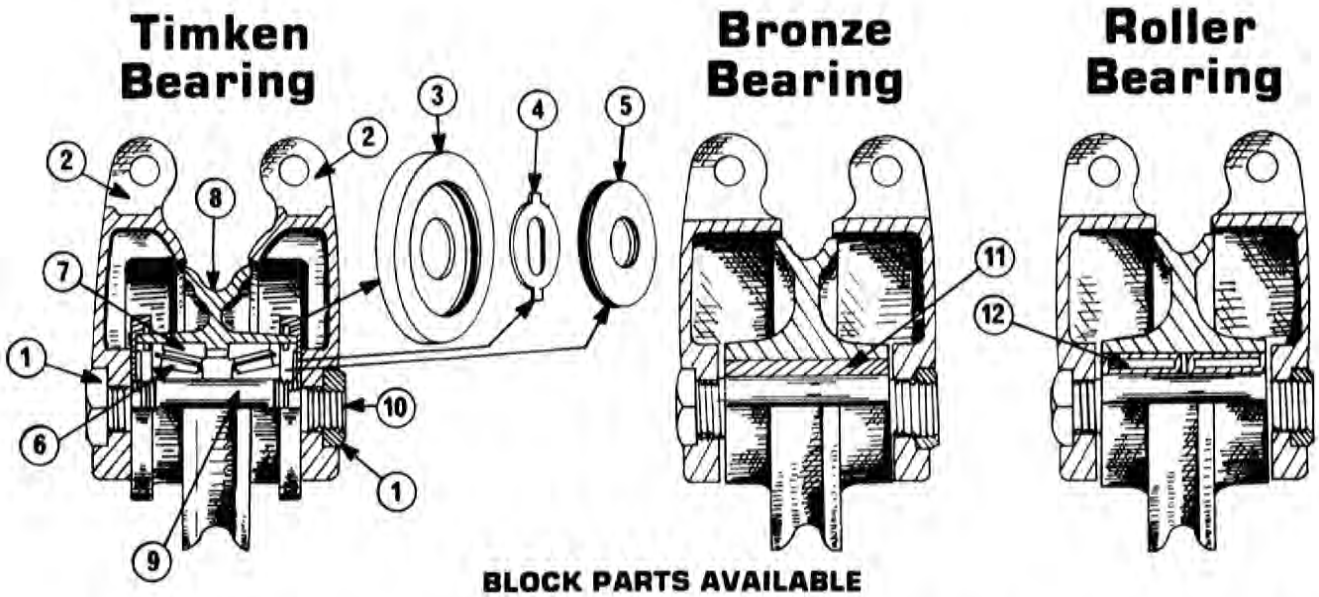

BLOCK PARTS AVAILABLE

(1) **SHEAVE PIN NUT.** There is a nut on each end of the sheave pin. They hold the block assembly together.

(2) **BLOCK SIDE.** The two block sides comprise the main frame of a block. Their shape and weight are critical factors in how a block performs its work. Made of cast-annealed steel - with special alloys used for special requirements.

(3) **OPTIONAL SANDSEAL.** Keeps contamination out of Timken bearings in underwater use. Shown on only one side of "exploded" picture to simplify illustration. In actual practice, there is one on each side. Furnished on special order.

(4) **RETAINER LOCK.** An oblong hole in retainer lock fits over flattened part of sheave pin. When in place, cams on outer edge engage locking spaces in surface of adjustable bearing retainer.

(5) **ADJUSTABLE BEARING RETAINER.** A grooved disk with felt in the groove. When screwed into place, keeps bearing cones snug against cups and provides wear take-up. Felt ring in groove forms effective grease seal.

(6) **BEARING CONE.** The opposing pair of famous Timken bearings each has a cone - the inner assembly consisting of the inside race and tapered rollers.

(7) **BEARING CUP.** The outer race of each Timken bearing. (Note: The spacer between the two bearing cups is machined from the parent sheave metal - providing high side load capacity.)

(8) **SHEAVE.** Skookum sheaves are made of manganese steel.

(9) **SHEAVE PIN.** The axle on which the sheave rotates. Precision machined of high tensile steel.

(10) **GREASE HOLE.** The sheave pin is drilled with a hole through its center. A cross-hole intersects the center hole and opens into the middle of the bearing. Thus, grease forced into the center hole flows into the bearing, filling the available space. A screw plug (not shown) seals the grease hole.

(11) **BRONZE BEARING.** Precision-machined bronze bearings is held in hub of sheave with tight press fit. Rotates on sheave pin whose smooth surface has been ground and polished.

(12) **ROLLER BEARINGS.** Double rows of low-friction roller bearings.

SKOOKUM

LINE SIZE REFERENCE GUIDE

3/8" - 1/2" LINE SIZE			
Sheave Size	**Catalog Number**	**Bearing**	**Capacity**
4"	A-4	Bronze Bearing	5 Ton
	A-4R	Roller Bearing	5 Ton
	S-4	Bronze Bearing	3 Ton
	S-4R	Roller Bearing	3 Ton
	110-A	Bronze Bearing	5 Ton
6"	A-6	Bronze Bearing	7 Ton
	A-6R	Roller Bearing	6.5 Ton
	S-6	Bronze Bearing	6.5 Ton
	S-6R	Roller Bearing	6.5 Ton
	T-6S	Timken Bearing	7 Ton
	TR-6A	Timken Bearing	7 Ton
	R-6	Timken Bearing	8 Ton
	706S	Timken Bearing	7.5 Ton
	106R	Ball Bearing	3 Ton

1/2" - 5/8" LINE SIZE			
Sheave Size	**Catalog Number**	**Bearing**	**Capacity**
8"	A-8	Bronze Bearing	8 Ton
	A-8R	Roller Bearing	6.5 Ton
	S-8	Bronze Bearing	6.5 Ton
	S-8R	Roller Bearing	8 Ton
	T-8	Timken Bearing	8 Ton
	108-R	Ball Bearing	4 Ton
	R-8	Timken Bearing	8 Ton
	808	Timken Bearing	10 Ton
10"	R-10	Timken Bearing	9 Ton

5/8" - 3/4" LINE SIZE			
Sheave Size	**Catalog Number**	**Bearing**	**Capacity**
10"	A-10	Bronze Bearing	8 Ton
	A-10R	Roller Bearing	6.5 Ton
	S-10	Bronze Bearing	7.5 Ton
	S-10R	Roller Bearing	6.5 Ton
	BP-100	Bronze Bearing	7.5 Ton
	T-10S	Timken Bearing	8 Ton
	410A	Timken Bearing	12.5 Ton

3/4" - 7/8" LINE SIZE			
Sheave Size	**Catalog Number**	**Bearing**	**Capacity**
12"	A-12	Bronze Bearing	13.5 Ton
	A-12R	Roller Bearing	12.5 Ton
	T-12A	Timken Bearing	16 Ton
	412A	Timken Bearing	17.5 Ton
14"	T-14	Timken Bearing	16 Ton
	414A	Timken Bearing	17.5 Ton
16"	416	Timken Bearing	17.5 Ton
18"	418	Timken Bearing	17.5 Ton

7/8" to 1" LINE SIZE			
Sheave Size	**Catalog Number**	**Bearing**	**Capacity**
8"	308	Bronze Bearing	13 Ton
10"	510	Bronze Bearing	17.5 Ton
	1010	Timken Bearing	17.5 Ton
	2210A	Timken Bearing	21.5 Ton
12"	412	Timken Bearing	17.5 Ton
	512	Bronze Bearing	17.5 Ton
14"	414A	Timken Bearing	17.5 Ton
	414T	Timken Bearing	17.5 Ton
	514	Bronze Bearing	17.5 Ton
16"	416	Timken Bearing	17.5 Ton
	416T	Timken Bearing	17.5 Ton
18"	418	Timken Bearing	17.5 Ton

1-1/8" to 1-1/4" LINE SIZE			
Sheave Size	**Catalog Number**	**Bearing**	**Capacity**
8"	80	Timken Bearing	16 Ton
10"	310	Bronze Bearing	20 Ton
12"	BML-12	Timken Bearing	27.5 Ton
	2212	Timken Bearing	22 Ton
14"	2214	Timken Bearing	22 Ton
16"	2216B	Timken Bearing	25 Ton
	2216WA	Timken Bearing	25 Ton
18"	180	Timken Bearing	26 Ton
	2218A	Timken Bearing	27.5 Ton
20"	2220	Timken Bearing	27.5 Ton
22"	2222	Timken Bearing	29 Ton

1-1/4" to 1-3/8" LINE SIZE			
Sheave Size	**Catalog Number**	**Bearing**	**Capacity**
12"	312	Bronze Bearing	23 Ton
14"	2214TM	Timken Bearing	28.5 Ton
18"	2218TM	Timken Bearing	28.5 Ton

1-1/2" to 1-3/4" LINE SIZE			
Sheave Size	**Catalog Number**	**Bearing**	**Capacity**
14"	2014	Bronze Bearing	36.5 Ton
16"	2016	Bronze Bearing	40.5 Ton
	2616	Timken Bearing	50 Ton

1-1/2" to 2-1/2" LINE SIZE			
Sheave Size	**Catalog Number**	**Bearing**	**Capacity**
24"	2624	Timken Bearing	75 Ton

Specifications subject to change without notice.

New! Lightweight Aluminum/Alloy Blocks!

Lightweight

Maximum 8 lbs.

High Strength

3 Ton W.L.L. at 4:1

Available with:

- Regular Yoke
- Swivel Eye
- Swivel Hook

- AND -

Choose an Aluminum or Manganese Steel Sheave

SKOOKUM®

MADE IN USA

SKOOKUM®

BLOCKS AND RIGGING ***Since 1890***

1-800-547-8211 **For a Dealer Near You**

P.O. Box 280 • Hubbard, OR 97032 U.S.A. • Fax: (503) 651-3409

An Ulven Company

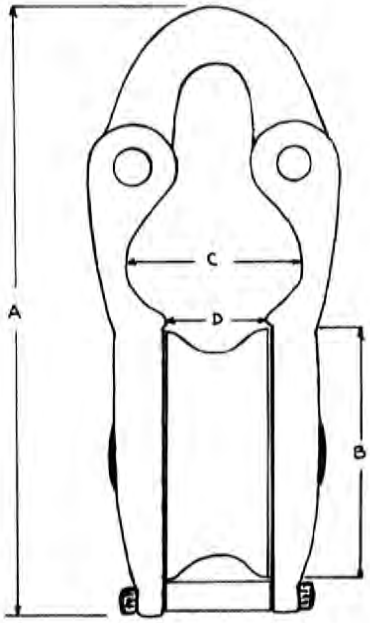

ALUMINUM SHEAVES

	Block Number	Options	Sheave Size	Sheave Pin Size	Weight	Working Load*
Roller Bearings	SK-4R	regular yoke	4 x 1 3/8	1 1/4	6	6,000 lbs
	SK-4R	swivel hook	4 x 1 3/8	1 1/4	8	6,000 lbs
	SK-4R	swivel eye	4 x 1 3/8	1 1/4	7	6,000 lbs
Bronze Bushed	SK-4	regular yoke	4 x 1 3/8	1 1/4	6	6,000 lbs
	SK-4	swivel hook	4 x 1 3/8	1 1/4	8	6,000 lbs
	SK-4	swivel eye	4 x 1 3/8	1 1/4	7	6,000 lbs

*Ultimate strength is 4 times working load.

MANGANESE STEEL SHEAVES

	Block Number	Options	Sheave Size	Sheave Pin Size	Weight	Working Load*
Roller Bearings	SK-4RM	regular yoke	4 x 1 3/8	1 1/4	6	6,000 lbs
	SK-4RM	swivel hook	4 x 1 3/8	1 1/4	8	6,000 lbs
	SK-4RM	swivel eye	4 x 1 3/8	1 1/4	7	6,000 lbs
Bronze Bushed	SK-4M	regular yoke	4 x 1 3/8	1 1/4	6	6,000 lbs
	SK-4M	swivel hook	4 x 1 3/8	1 1/4	8	6,000 lbs
	SK-4M	swivel eye	4 x 1 3/8	1 1/4	7	6,000 lbs

*Ultimate strength is 4 times working load.

SKOOKUM®
BLOCKS AND RIGGING *Since 1890*
1-800-547-8211 For a Dealer Near You
P.O. Box 280 • Hubbard, OR 97032 U.S.A. • Fax: (503) 651-3409
An Ulven Company

SKOOKUM®

SNATCH BLOCKS: 3 Ton to 7 Ton WLL

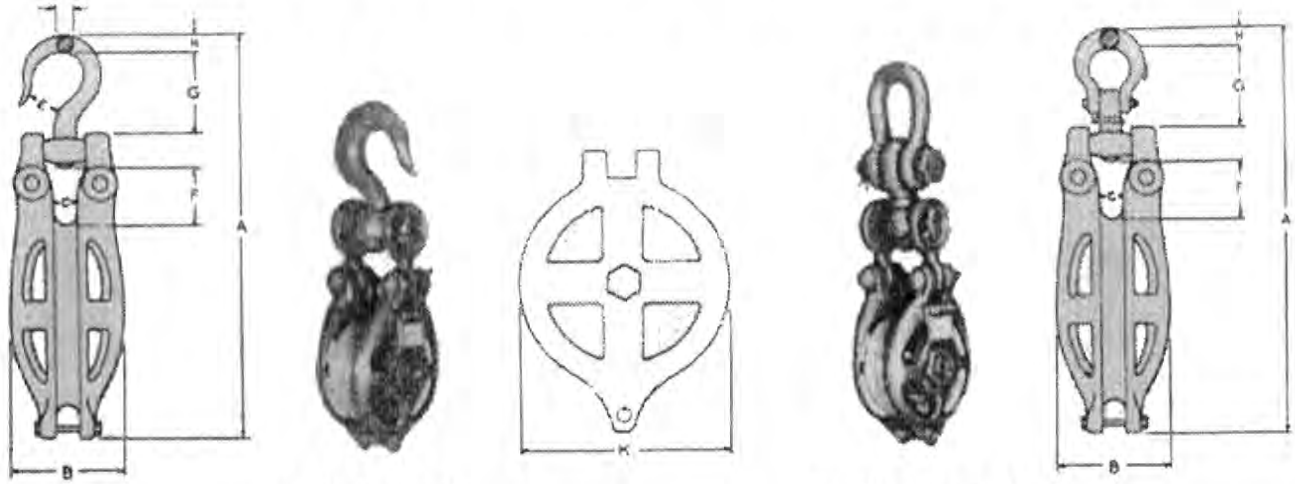

SWIVEL HOOK
(Also available with latch)

SWIVEL SHACKLE

SPECIFICATIONS

	Block Number	Sheave Size	Sheave Pin Size	Line Size	Weight	Working Load*
Roller Bearings	**S-4R**	4 x 1.38	1.00	3/8	11 lbs	**6,000 lbs**
	S-6R	6 x 1.13	1.25	3/8 to 1/2	26 lbs	**13,000 lbs**
	S-8R	8 x 1.13	1.25	1/2 to 5/8	32 lbs	**13,000 lbs**
	S-10R	10 x 1.25	1.25	5/8 to 3/4	44 lbs	**13,000 lbs**
Bronze Bearings	**S-4**	4 x 1.38	1.25	3/8	11 lbs	**6,000 lbs**
	S-6	6 x 1.13	1.50	3/8 to 1/2	26 lbs	**13,000 lbs**
	S-8	8 x 1.13	1.50	1/2 to 5/8	32 lbs	**14,000 lbs**
	S-10	10 x 1.25	1.50	5/8 to 3/4	44 lbs	**14,000 lbs**

* Ultimate strength is 5 times working load.

DIMENSIONS

	Block Number	A	B	C	D	E	F	G	H
Swivel Hook	**S-4 & S-4R**	12.00	3.50	1.13	1.25	2.88	2.88	1.81	4.50
	S-6 & S-6R	16.75	4.00	7/8	1.88	2.50	4.00	1.63	7.00
	S-8 & S-8R	20.00	4.00	1.00	1.88	2.50	4.75	1.63	9.00
	S-10 & S-10R	22.00	4.00	1.13	2.00	2.50	4.75	1.75	11.00
Swivel Shackle	**S-4 & S-4R**	14.50	4.00	1.13	2.00	2.50	2.06	3/4	4.50
	S-6 & S-6R	17.75	4.00	7/8	2.28	2.50	2.50	7/8	7.00
	S-8 & S-8R	21.00	4.00	1.00	2.69	2.50	2.63	1.00	9.00
	S-10 & S-10R	22.50	4.00	1.13	2.69	2.50	2.63	1.00	11.00

MANGANESE LONG-LIFE SHEAVES

SKOOKUM®

HALF SIDE BLOCKS: 5 Ton to 13.5 Ton WLL

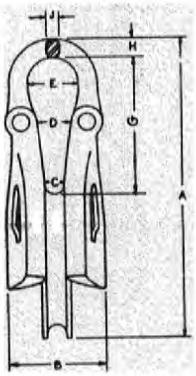

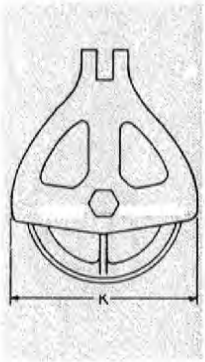

SPECIFICATIONS

	Block Number	Sheave Size	Sheave Pin Size	Line Size	Weight	Working Load*
Bronze Bearings	**A-4**	4 x 1.38	1.25	3/8	9 lbs	**10,000 lbs**
	A-6	6 x 1.13	1.50	3/8 to 1/2	17 lbs	**14,000 lbs**
	A-8	8 x 1.13	1.50	1/2 to 5/8	29 lbs	**16,000 lbs**
	A-10	10 x 1.25	1.50	5/8 to 3/4	34 lbs	**16,000 lbs**
	A-12	12 x 1.38	1.94	3/4 to 7/8	51 lbs	**27,000 lbs**
Roller Bearings	**A-4R**	4 x 1.38	1.00	3 /8	11 lbs	**10,000 lbs**
	A-6R	6 x 1.13	1.25	3/8 to 1/2	17 lbs	**13,000 lbs**
	A-8R	8 x 1.13	1.25	1/2 to 5/8	29 lbs	**13,000 lbs**
	A-10R	10 x 1.25	1.25	5/8 to 3/4	37 lbs	**13,000 lbs**
	A-12R	12 x 1.38	1.50	3/4 to 7/8	55 lbs	**25,000 lbs**

*Ultimate strength is 5 times working load.

DIMENSIONS

Block Number	A	B	C	D	E	F	G	H	I
A-4 & A-4R	7.75	3.50	1.13	1.50	1.25	3.50	7/8	7/8	4.50
A-6 & A-6R	10.50	4.00	7/8	1.50	1.50	4.50	1.00	1.00	6.50
A-8 & A-8R	14.50	4.00	1.00	1.50	1.75	6.00	1.25	1.25	9.00
A-10 & A-10R	16.50	4.00	1.00	1.50	1.75	6.50	1.25	1.25	11.00
A-12 & A-12R	19.75	6.25	1.00	1.75	2.25	6.50	1.50	1.50	12.50

MANGANESE LONG-LIFE SHEAVES

SKOOKUM®

FULL SIDE BLOCKS: 5 Ton to 13.5 Ton WLL

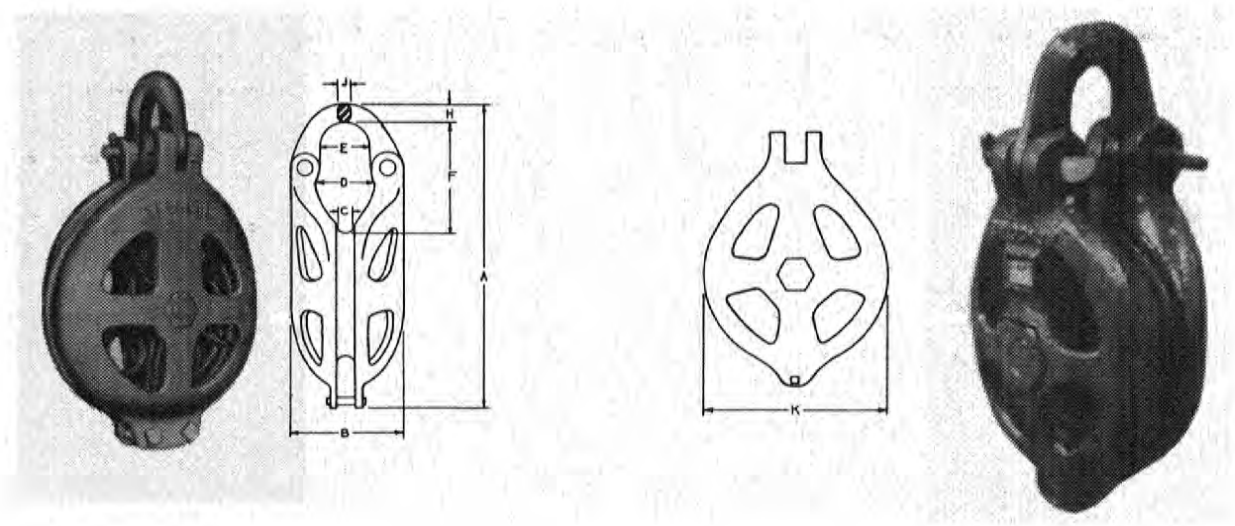

SPECIFICATIONS

	Block Number	Sheave Size	Sheave Pin Size	Line Size	Weight	Working Load*
BRONZE BEARING	**A-4T**	4 x 1.375	1.25	3 /8	13 lbs	**10,000 lbs**
	A-6T	6 x 1.125	1.50	3/8 to 1/2	20 lbs	**14,000 lbs**
	A-8T	8 x 1.125	1.50	1/2 to 5/8	31 lbs	**16,000 lbs**
	A-10T	10 x 1.250	1.50	5/8 to 3/4	37 lbs	**16,000 lbs**
	A-12T	12 x 1.375	1.94	3/4 to 7/8	60 lbs	**27,000 lbs**
ROLLER BEARING	**A-4RT**	4 x 1.75	1.00	3/8	13 lbs	**10,000 lbs**
	A-6RT	6 x 1.125	1.25	3/8 to 1/2	20 lbs	**13,000 lbs**
	A-8RT	8 x 1.125	1.25	1/2 to 5/8	31 lbs	**13,000 lbs**
	A-10RT	10 x 1.250	1.25	5/8 to 3/4	40 lbs	**13,000 lbs**
	A-12RT	12 x 1.375	1.50	3/4 to 7/8	60 lbs	**25,000 lbs**

*Ultimate strength is 5 times working load.

DIMENSIONS

Block Number	A	B	C	D	E	F	G	H	I
A-4T & A-4RT	9.63	3.50	1.13	1.50	1.25	3.25	7/8	3/4	4.50
A-6T & A-6RT	12.00	4.00	15/16	1.50	1.50	4.25	1.13	1.00	6.50
A-8T & A-8RT	16.38	4.00	15/16	1.50	1.75	5.75	1.25	1.13	8.63
A-10T & A-10RT	18.50	4.00	1.00	1.50	1.75	6.50	1.25	1.13	11.00
A-12T & A-12RT	21.00	6.25	1.00	1.75	2.25	6.50	1.50	1.50	12.50

MANGANESE LONG-LIFE SHEAVES

SKOOKUM®

WIDE SHEAVE - WIDE THROAT BLOCKS:

3 Ton to 26 Ton WLL

TR-6A

106-R
108-R
BP-100

706-S
808
808-S

180

2216-WA

SPECIFICATIONS-MANGANESE LONG-LIFE SHEAVES

Block Nmber	Sheave Size	Sheave Pin Size	Line Size	Bearing Type	Weight	Working Load*
TR-6A	6 x 1.25	1.31	3/8 to 1/2	Timken	27 lbs	**14,000 lbs**
106-R	6 x 1.50	1.19	3/8 to 1/2	Ball	16 lbs	**6,000 lbs**
108-R	8 x 1.50	1.19	3/8 to 5/8	Ball	19 lbs	**8,000 lbs**
BP-100	10 x 3	1.50	5/8 to 3/4	Bronze	30 lbs	**15,000 lbs**
706-S	6 x 3	1.38	3/8 to 1/2	Timken	29 lbs	**14,000 lbs**
808	8 x 3	1.38	1/2 to 5/8	Timken	32 lbs	**20,000 lbs**
808-S	8 x 3	1.38	1/2 to 5/8	Timken	36 lbs	**14,000 lbs**
180	18 x 4	1.63	1-1/8 to 1-1/4	Timken	280 lbs	**52,000 lbs**
2216WA	16 x 7	2.63	1-1/8 to 1-1/4	Timken	285 lbs	**50,000 lbs**

*Ultimate strength is 5 times working load.

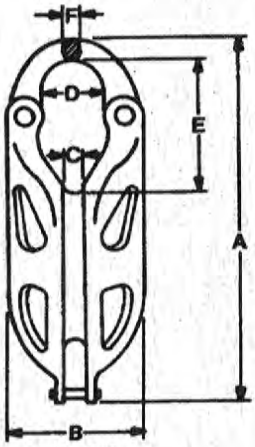

TR-6A
180

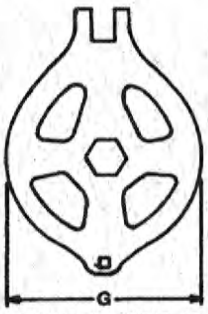

106-R 108-R
BP-100

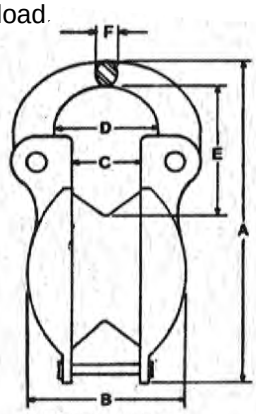

706 808

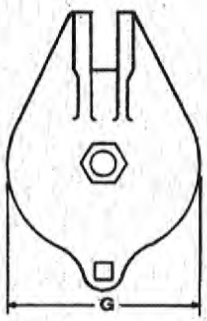

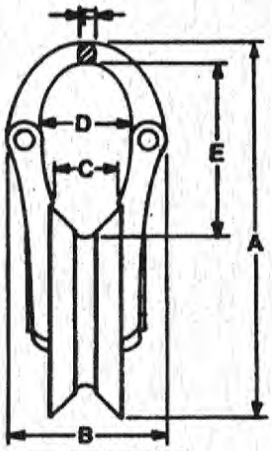

2216-WA

DIMENSIONS

Block Number	A	B	C	D	E	F	G
TR-6A	13.00	6.00	1.00	3.00	5.25	1.00	7.00
106-R	14.00	5.50	1.50	2.50	6.00	1.00	6.75
108-R	16.00	5.75	1.50	2.50	6.00	1.00	8.88
BP-100	19.00	6.25	2.25	3.50	5.00	1.13	10.63
706-S	12.00	6.50	2.63	2.63	3.75	1.25	6.75
808	17.00	6.50	2.63	2.63	3.75	1.38	8.75
180	38.00	11.25	3.50	5.75	8.00	2.00	20.00
2216WA	30.50	13.63	6.75	9.50	15.00	2.38	16.50

Dimensions shown are for regular yoke blocks. Dimensions for blocks with swivel hook or swivel shackle attachments, where applicable, available on request

SKOOKUM®

WIDE SHEAVE - WIDE THROAT BLOCKS:
3 Ton to 26 Ton WLL

110-A
110-AR Roller Bearings
R-4 Roller Bearings

R-6 R-8

R-10

508

80

SPECIFICATIONS-MANGANESE LONG-LIFE SHEAVES

Block Number	Sheave Size	Sheave Pin Size	Line Size	Bearing Type	Weight	Working Load*
110-A	4 x 1.375	1.25	3/8	Bronze	12 lbs	10,000 lbs
110-AR	4 x 1.375	1.25	3/8	Roller	12 lbs	10,000 lbs
R-4	4 x 1.375	1.25	3/8	Roller	12 lbs	10,000 lbs
R-6	6 x 3	1.38	3/8 to 1/2	Timken	30 lbs	16,000 lbs
R-8	8 x 3	1.38	1/2 to 5/8	Timken	43 lbs	16,000 lbs
R-10	10 x 4	1.38	1/2 to 5/8	Timken	50 lbs	18,000 lbs
508	8 x 4	2.00	1 to 1-1/8	Timken	72 lbs	30,000 lbs
80	8 x 4	2.00	1-1/8 to 1-1/4	Timken	80 lbs	32,000 lbs
TM-10	10 x 5	2.50	1 to 1-1/4	Timken	110 lbs	50,000 lbs

*Ultimate strength is 5 times working load

TM-10

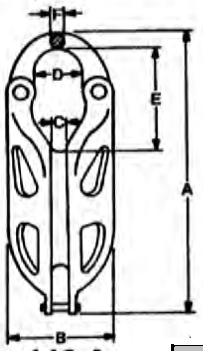

110-A
R-4

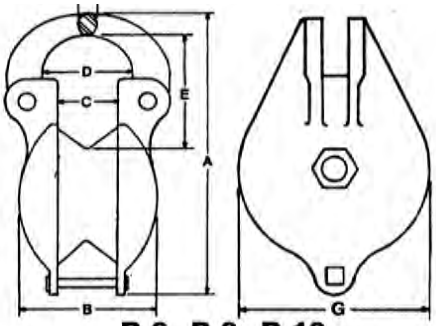

R-6 R-8 R-10

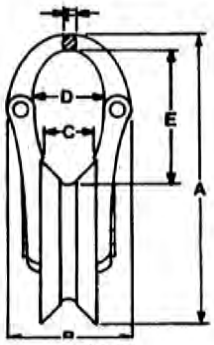

508
80
TM-10

DIMENSIONS

Block Number	A	B	C	D	E	F	G
110-A	10	1 3/4	1	2 1/2	5 1/4	1	4 3/4
110-AR	10	1 3/4	1	2 1/2	5 1/4	1	4 3/4
R-4	10	1 3/4	1	2 1/2	5 1/4	1	4 3/4
R-6	14 1/2	8	2 1/2	4 1/2	6 1/2	1 1/4	6 3/4
R-8	17	8 1/2	2 1/2	4 3/4	7 1/4	1 3/8	8 3/4
R-10	19 1/2	8	3 1/2	4 3/4	7 1/2	1 3/8	10 1/2
508	15	11	4	5 1/4	6 1/2	2	9 1/2
80	20	10 1/2	3 1/2	4 1/2	10 1/2	2	10
TM-10	20	12	4 1/2	6	9	2	11 1/2

Dimensions shown are for regular yoke blocks. Dimensions for blocks with swivel hook or swivel shackle attachments, where applicable, available on request.

Dimensions shown are for regular yoke blocks. Dimensions for blocks with swivel hook or swivel shackle attachments, where applicable, available on request.

SKOOKUM®

MULTI-PURPOSE BLOCKS:
7 Ton to 17.5 Ton WLL

CONSTRUCTION LOGGING MARINE INDUSTRIAL DREDGING DRAGLINE

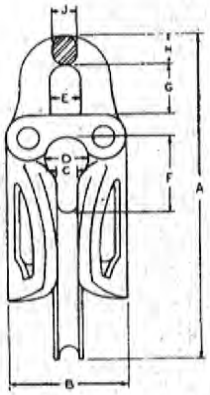

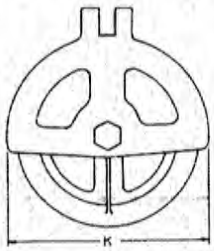

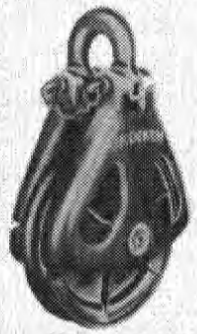

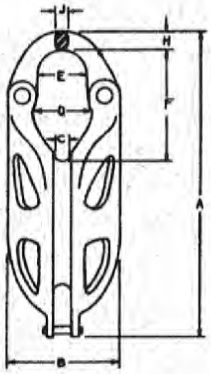

SPECIFICATIONS

	Block Number	Sheave Size	Sheave Pin Size	Line Size	Weight	Working Load*
Timken Bearing	**T-6S**	6 x 1.250	1.31	3/8	22 lbs	**14,000 lbs**
	T-8	8 x 1.375	1.31	1/2 to 5/8	32 lbs	**16,000 lbs**
	T-10S	10 x 1.75	1.31	5/8 to 3/4	44 lbs	**16,000 lbs**
	T-12A	12 x 2	1.81	3/4 to 7/8	69 lbs	**32,000 lbs**
	T-14	14 x 2	1.81	3/4 to 7/8	79 lbs	**32,000 lbs**
	410-A	10 x 2	1.50	3/4	48 lbs	**25,000 lbs**
	412-A	12 x 2.50	2.00	3/4 to 7/8 *1"	72 lbs	**35,000 lbs**
	414-A	14 x 2.50	2.00	3/4 to 7/8 *1"	94 lbs	**35,000 lbs**
	414-T	14 x 2.50	2.00	7/8 *1"	97 lbs	**35,000 lbs**
	416	16 x 2.50	2.00	3/4 to 7/8 *1"	97 lbs	**35,000 lbs**
	416-T	16 x 2.50	2.00	7/8 *1"	107 lbs	**35,000 lbs**
	418	18 x 2.50	2.00	7/8 to 1	108 lbs	**35,000 lbs**
	1010	10 x 2.50	2.00	7/8 to 1	75 lbs	**35,000 lbs**
Bronze Bearing	**510**	10 x 2.50	2.25	7/8 to 1	70 lbs	**35,000 lbs**
	512	12 x 2.50	2.25	7/8 to 1	80 lbs	**35,000 lbs**
	514	14 x 2.50	2.25	7/8 to 1	90 lbs	**35,000 lbs**

*Ultimate strength is 5 times working load. *1" Availabe on request.

DIMENSIONS

Block Number	A	B	C	D	E	F	G	H	I	J
T-6S	11.00	5.50	1.00	2.00	1.38	4.25	2.50	1.13	1.06	6.75
T-8	16.00	5.50	1.00	2.00	1.38	4.25	2.50	1.38	1.31	8.75
T-10S	18.00	5.50	1.38	2.25	1.63	4.25	2.50	1.50	1.31	10.75
T-12A	20.00	5.88	1.50	2.75	2.00	4.50	2.38	1.50	1.31	12.63
T-14	22.00	5.88	1.50	2.75	2.00	3.50	2.38	1.50	1.31	14.75
410-A	18.50	5.50	1.75	2.75	1.75	4.50	2.50	1.50	1.25	11.00
412-A	21.00	6.25	2.00	3.00	2.38	4.75	2.50	1.75	1.63	12.50
414-A	23.00	6.25	2.00	3.00	3.38	4.75	2.50	1.75	1.63	15.00
414-T	25.00	6.25	2.00	3.00	2.38	4.75	-----	1.75	1.63	15.00
416	25.00	6.25	2.00	3.00	2.38	4.75	2.50	1.75	1.63	17.00
416-T	27.00	6.25	2.00	3.00	2.38	4.75	-----	1.75	1.63	17.00
418	27.00	6.25	2.00	3.00	2.38	4.75	2.50	1.75	1.63	19.00
1010	19.00	6.25	2.00	2.50	2.75	2.00	2.50	2.00	1.75	11.00
510	19.00	6.25	2.00	2.50	2.75	3.50	2.50	2.00	1.88	11.00
512	22.00	6.25	2.00	2.50	2.75	3.50	2.75	2.00	1.88	13.00
514	24.00	6.25	2.00	2.50	2.75	3.50	2.75	2.00	1.88	15.00

MANGANESE LONG-LIFE SHEAVES

SKOOKUM®

HEAVY DUTY BLOCKS: 21.5 Ton to 29 Ton WLL

CONSTRUCTION LOGGING MARINE INDUSTRIAL DREDGING DRAGLINE

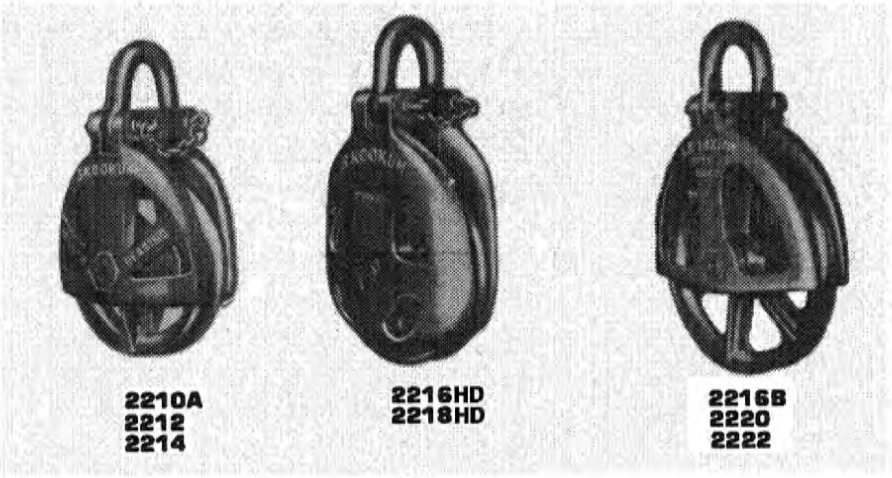

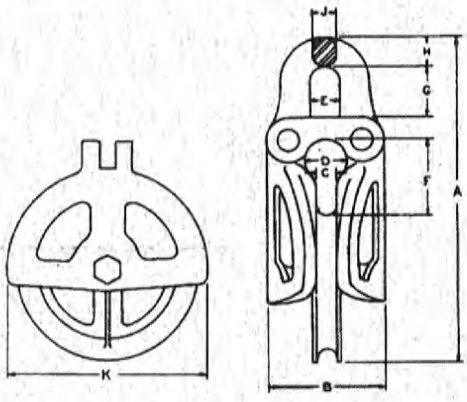

SPECIFICATIONS

	Block Number	Sheave Size	Sheave Pin Size	Line Size	Weight	Working Load *
Timken Bearing	**2210A**	10 x 2.50	2.00	7/8 to 1	83 lbs	**43,000 lbs**
	2212	12 x 2.50	2.00	1-1/8 to 1-1/4	111 lbs	**44,000 lbs**
	2214	14 x 2.50	2.00	1-1/8 to 1-1/4	130 lbs	**44,000 lbs**
	2216B	16 x 2.50	2.63	1-1/8 to 1-1/4	150 lbs	**50,000 lbs**
	2216HD	16 x 2.50	2.63	1-3/8	235 lbs	**60,000 lbs**
	2218HD	18 x 2.50	2.63	1-3/8	275 lbs	**60,000 lbs**
	2220	20 x 2.50	2.63	1 to 1-1/8	157 lbs	**55,000 lbs**
	2222	22 x 3	2.63	1-1/8 to 1-1/4	213 lbs	**58,000 lbs**

*Ultimate strength is 5 times working load.

DIMENSIONS

Block Number	A	B	C	D	E	F	G	H	I	J
2210A	18.00	7.00	2.00	2.75	2.75	4.25	2.25	2.00	1.75	11.00
2212	22.00	7.50	2.00	2.75	3.00	4.50	2.50	2.00	1.75	13.00
2214	25.00	7.50	2.00	2.75	3.00	4.75	2.50	2.00	1.75	15.00
2216B	26.50	8.00	2.13	3.00	3.00	4.00	2.25	2.00	1.75	16.63
2218A	31.00	9.00	2.25	3.50	4.00	5.25	4.00	2.38	2.13	19.00
2220	29.75	8.00	2.13	3.00	2.50	5.13	2.75	2.00	1.75	20.75
2222	33.38	8.00	2.13	3.13	3.38	5.25	4.25	2.38	2.13	23.00

SKOOKUM®

HEAVY DUTY BLOCKS: 13 Ton to 50 Ton WLL

MARINE DREDGING LOGGING DRAGLINE HEAVY CONSTRUCTION

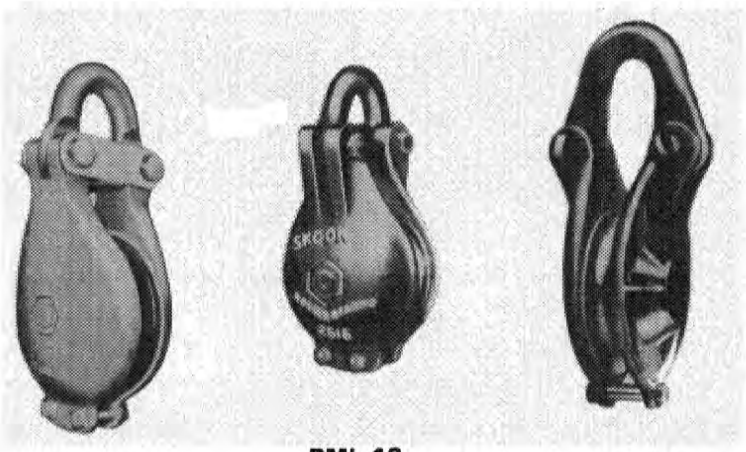

2214TM
2218TM
TRB240

BML-12
2616
2014
2016

308
310
312

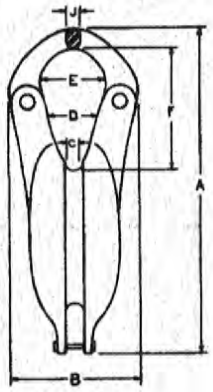

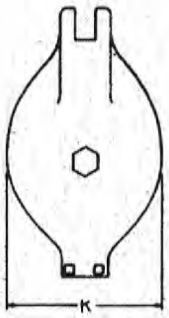

SPECIFICATIONS

	Block Number	Sheave Size	Sheave Pin Size	Line Size	Weight	Working Load *
Bronze Bearing	**308**	8 x 1.375	2.50	7/8 x 1	55 lbs	**26,000 lbs**
	310	10 x 2	3.00	1-1/8 x 1-1/4	120 lbs	**41,000 lbs**
	312	12 x 2.125	3.00	1-1/4 x 1-3/8	145 lbs	**46,000 lbs**
	2014	14 x 3	4.00	1-1/2 x 1-3/4	250 lbs	**73,000 lbs**
	2016	16 x 3	4.00	1-1/2 x 1-3/4	435 lbs	**81,000 lbs**
Timken Bearing	**BML-12**	12 x 2	2.63	1-1/8 x 1-1/4	150 lbs	**55,000 lbs**
	2214-TM	14 x 2	2.63	1-1/4 x 1-3/8	265 lbs	**57,000 lbs**
	2218-TM	18 x 2.50	2.63	1-1/4 x 1-3/8	315 lbs	**57,000 lbs**
	2616	16 x 3	4.00	1-1/2 x 1-3/4	600 lbs	**100,000 lbs**
	2624	24 x 3.50	4.00	1-1/2 x 2	850 lbs	**150,000 lbs**

*Ultimate strength is 5 times working load.

DIMENSIONS

Block Number	A	B	C	D	E	F	G	H
308	18.50	7.00	1.75	2.75	2.50	7.50	1.75	8.13
310	22.50	9.00	1.75	2.75	3.50	8.50	2.25	11.00
312	24.50	9.00	1.75	2.75	3.50	8.75	2.25	13.00
2014	31.00	11.50	2.50	3.00	3.00	12.00	2.75	15.00
2016	35.00	12.00	2.50	3.50	5.00	15.00	2.75	17.00
BML-12	25.00	11.75	1.75	4.50	4.00	9.00	2.50	13.00
2214-TM	32.00	11.75	2.50	4.50	4.50	13.50	2.50	15.75
2218-TM	38.00	12.00	2.38	3.75	4.50	14.00	2.75	19.75
2616	37.00	12.50	3.00	4.00	7.75	15.00	3.00	17.50
2624	46.00	14.00	3.00	5.25	8.00	15.50	3.00	29.00

SKOOKUM®

Hubbard, Oregon
PH: 503-651-3175
Fax: 503-651-3409

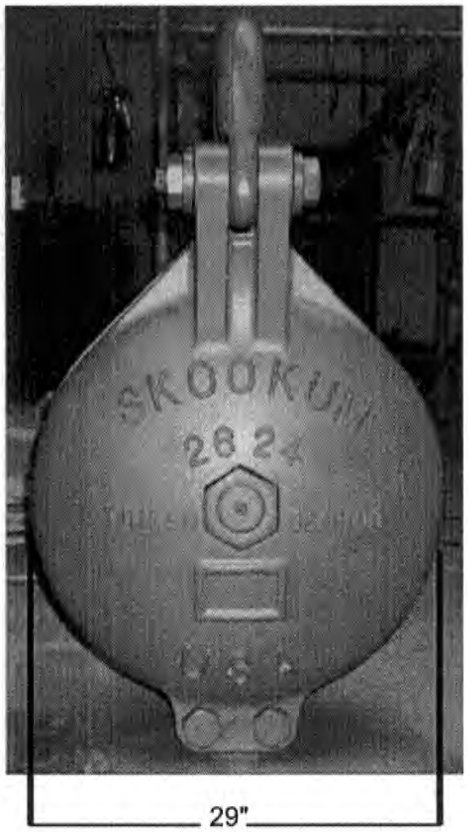

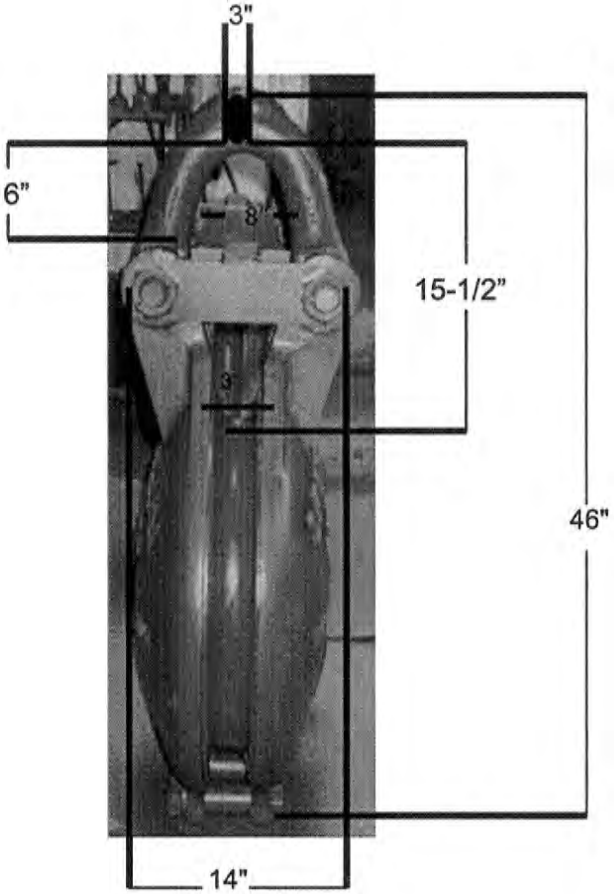

Skookum model 2624 block

Skookum

Skookum, Hubbard, Ore.. has introduced a 75-ton WLL block designed to handle heavy lifts and larger tilt-up load requirements. The new model 2624 block features a 24-inch outside diameter wear-resistant sheave and Timken bearings and can accommodate 1-1/2 to 2-inch wire rope.

The 2624 is equipped with an easy-opening yoke for hassle-free wire rope installation. It has heavy-duty cast steel block sides which improves safety and endurance. The block will soon be available with an easy-opening swivel eye or shackle attachment (with thrust bearing). Estimated weight is 830 lbs.

Exciting Details About Skookum Trawl Blocks.

Skookum "Gold Standard" Alloy safety pin shackle. (Optional)

New Load Ratings on 16" and 24" trawl blocks.

Timken Thrust Bearings in swivel crosshead.

Manufactured in Oregon. All domestic material.

4 Sizes - 10 ton, 25 ton, 50 ton and 90 ton WLL

Sheave is cast manganese steel. The strongest.

Timken Bearings in all Skookum Trawl Blocks. The best, in a word.

SKOOKUM TRAWL BLOCKS

You too will get excited with top-of-the-line performance of Skookum Trawl Blocks. This is the ultimate quality in manufacture, engineering and design. The Skookum name is known worldwide–with 100 years experience in the block manufacturing business.The same engineering has gone into these new trawl blocks.

Check these quality/performance features:

- Timken Tapered Roller Bearings. Timken is the name synonymous with the best bearings you can buy. For strength. For long, long life. And the capacity to retain more lubricant for extended periods.
- Cast Manganese Steel Sheaves. Here again, the longest lasting material for the job. This manganese steel has work-hardening characteristics that make it extremely resistant to wire rope wear.
- Four popular sizes. Available in 10-ton (10" sheave) 25-ton (16" sheave), 50-ton (24" sheave), and 90-ton (30" sheave) for a choice to fit your fishing need.
- Made in Oregon, U.S.A. All materials are domestic. In addition to the finest quality, this means faster delivery and better availability. Skookum Trawl Blocks, service and parts are readily available through Skookum distributors.
- Skookum "Gold Standard" Alloy Shackle is an available option. This is the ultimate in metallurgical science–a special alloy steel of unmatched strength, hardness and durability.
- Hot Dip Galvanized. For a durable, corrosion resistant finish.
- Minimum Ultimate Work Load is four times the working load.

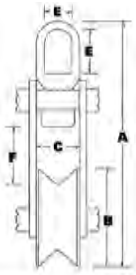

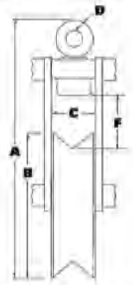

Block Number	Sheave Size	A	B	C	D	E	F	Weight	Working Load
TB10W	10 x 5	25	10	5.38	-----	2.50 x 3.75	5	125 lbs	**10-ton**
TB16W	16 x 7	39	16	7.38	-----	3.75 x 6	9	370 lbs	**25-ton**
TB24W	24 x 7	43	24	7.38	2.31	-----	7.38	700 lbs	**50-ton**
TB30W	30 x 7	55	30	7.38	3.38	-----	6	1250 lbs	**90-ton**

All Models with Timken Tapered Roller Bearings and Timken Thrust Bearings.
Designed to accept various wire and synthetic rope sizes.

SKOOKUM®

AN ULVEN COMPANY

"We're always updating and improving."

The latest addition to the line of blocks built by **SKOOKUM**® is the new 18" 25 ton BCM fullsided trawl block with improved wear resistant steel sheave.

- Made in USA
- Galvanized finish
- Pressure lube grease fitting to sheave and eye bolt
- Heavy duty steel construction
- 10-Ton thru 30-Ton fitted with Timken tapered roller bearings
- Extra heavy duty eye stem on 25 & 30 ton blocks
- Drop forged Eye Stems on all BCM Blocks

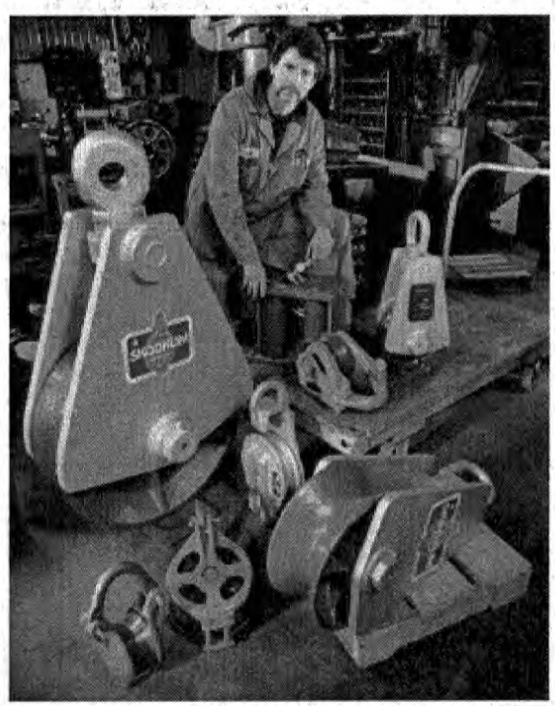

BCM Trawl Blocks

"The Orange Sheave Block."®

Available Sizes:

BCM.....6" ..... (5-Ton) WLL
BCM.....8" ..... (10-Ton) WLL
BCM.....12" ..... (10-Ton) WLL
BCM.....16" ..... (20-Ton) WLL
BCM.....18" ..... (20-Ton) WLL
BCM.....20" ..... (30-Ton) WLL

Fullsided Models:

BCM ..... 6"... *Fat Boy*... (5-Ton) WLL
BCM ..... 12"..... (10-Ton) WLL
BCM ..... 16"..... (20-Ton) WLL
BCM ..... 18"..... (20-Ton) WLL
BCM ..... 18"..... (25-Ton) WLL
BCM ..... 20"..... (30-Ton) WLL

SKOOKUM®
"Engineered for Extremes."

SKOOKUM®

PO Box 280 • Hubbard, Oregon 97032 USA
503-651-3175 • 1-800-547-8211 • FAX 503-651-3409
AN ULVEN COMPANY

SKOOKUM® BCM

BCM TRAWL BLOCKS

Half Side

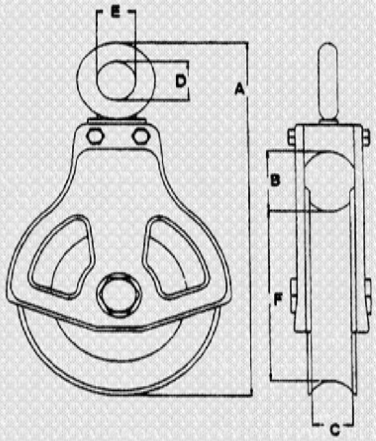

- Made in USA
- Galvanized Finish
- 5 Ton - 30 Ton @ 4 to 1 Design Factor
- Timken Taper Roller Bearings 10 Ton - 30 Ton
- Long lasting wear resistant sheaves
- Pressure lubricated sheaves and swivel eyes

HALF SIDE BLOCKS	A	B	C	D	E	F	WT EA
BCM 6" 5-Ton	14"	3"	2 -1/2"	2"	N/A	4-1/2"	25 lbs.
BCM 8" 10-Ton	19"	4-1/4"	2 -5/8"	2-1/2"	N/A	6-1/4"	41 lbs.
BCM 12" 10-Ton	23"	4-1/2"	3-1/2"	2-1/2"	N/A	9-1/2"	79 lbs.
BCM 16" 20-Ton	28"	4-1/2"	3-1/2"	3"	N/A	13-1/2"	132 lbs.
BCM 18" 20-Ton	31"	4-1/2"	3-1/2"	3"	N/A	16"	151 lbs.
BCM 20" 30-Ton	37"	7-1/4"	6-1/2"	4-1/2"	3"	17"	330 lbs.

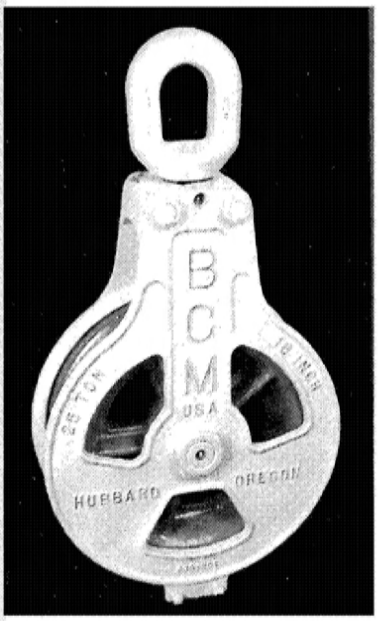

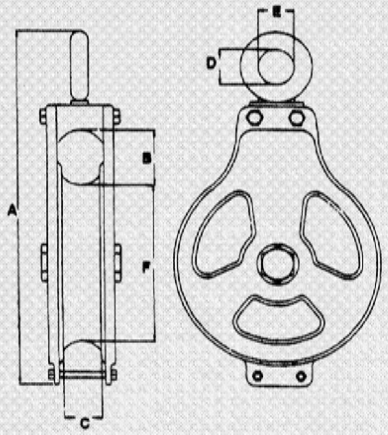

Full Side

- Made in USA
- Galvanized Finish
- 20 Ton - 30 Ton @ 4 to 1 Design Factor
- Timken Taper Roller Bearings
- Long lasting wear resistant sheaves
- Full sides helps to eliminate fouling
- Pressure lubricated sheaves and swivel eyes

FULL SIDE BLOCKS	A	B	C	D	E	F	WT EA
BCM 12" 10-Ton	26"	4-1/2"	3-1/2"	2-1/2"	N/A	9-1/2"	87 lbs.
BCM 16" 20-Ton	32"	3"	2-1/2"	3"	N/A	13-1/2"	158 lbs.
BCM 18" 20-Ton	36"	7-1/2"	3-1/2"	3"	N/A	16"	205 lbs.
BCM 18" 25-Ton	39"	7"	5-5-1/2"	4-1/2"	3"	15-1/2"	315 lbs.
BCM 20" 30-Ton	41"	7-1/2"	6-1/2"	4-1/2"	3"	17"	370 lbs.

TRY NET BLOCKS

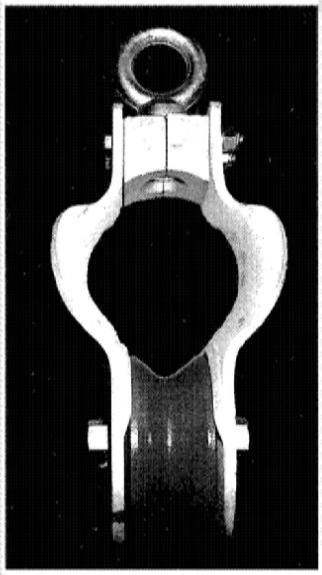

FAT BOY

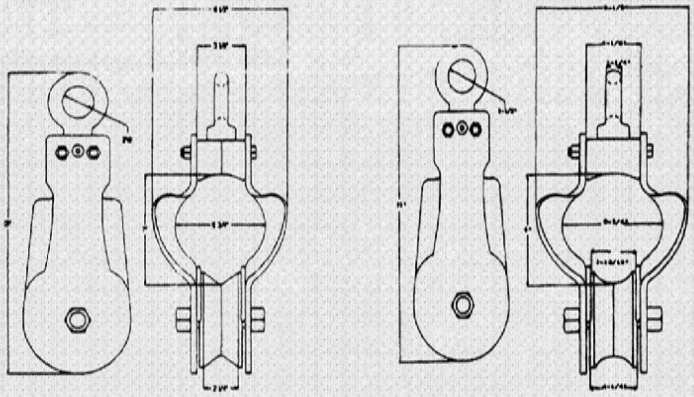

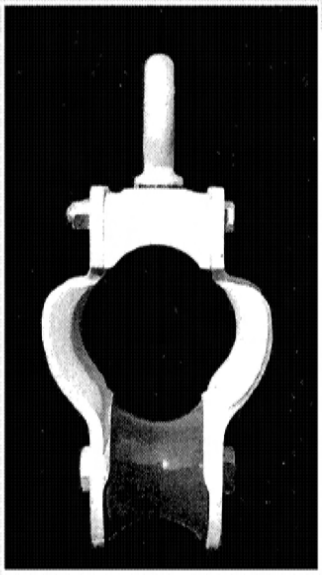

SUPER FAT

- Made in USA
- 5 Ton / 10 Ton WLL @ 4 to 1 Design Factor
- Galvanized Finish
- Heavy Duty Grooved Bronze Bushings
- Long lasting wear resistant sheaves
- Pressure lubricated...Eye Stem and Bushings
- Recessed Eye Stem Nut to eliminate wire fouling and hanging up
- Roller Bearings available upon request

OUTRIGGER BLOCKS
For Synthetic Rope

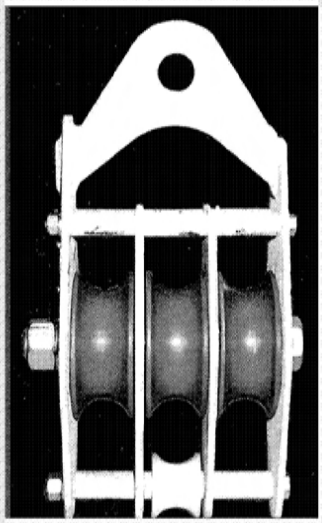

305500

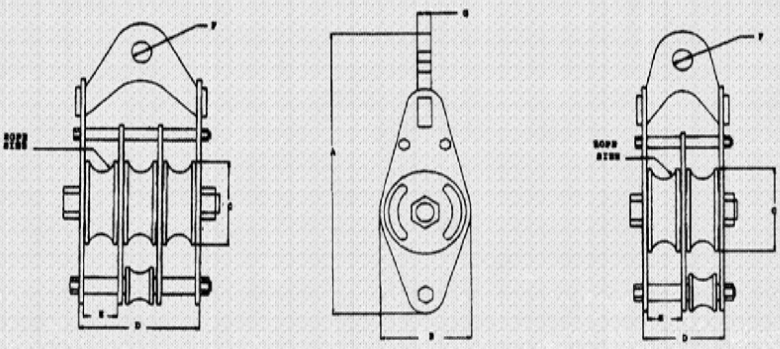

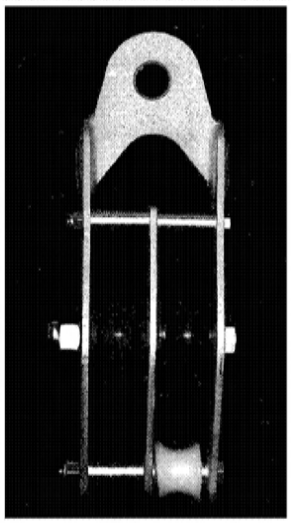

305400

All BCM Outrigger blocks are equipped with 2" dia. nylon tailholds.
5 ton BCM Outrigger blocks consist of galvanized construction and special nylon sheaves for synthetic ropes.

PART NO.	ROPE SIZE	A	B	C	D	E	F	G
305400	1.25	15.27"	5"	4.5"	4.5"	1.87"	1.1"	0.75"
305500	1.25	15.27"	5"	4.5"	6.62"	1.87"	1.1"	0.75"

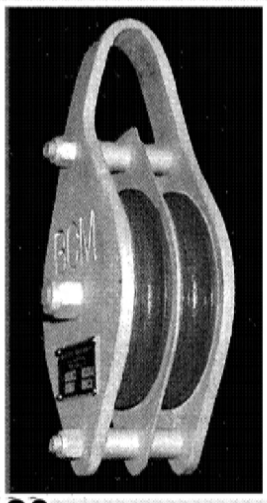

OUTRIGGER BLOCKS
For Wire Rope

- Made in USA
- 3 Ton WLL @ 4 to 1 Design Factor
- Galvanized Finish
- Oilite Bushings
- Heavy Duty Side Panels
- Streamline Design
- Precision Machined Sheaves - ½" W.R.
- Weight 25 lbs.

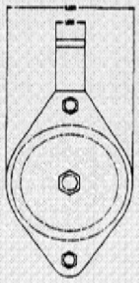

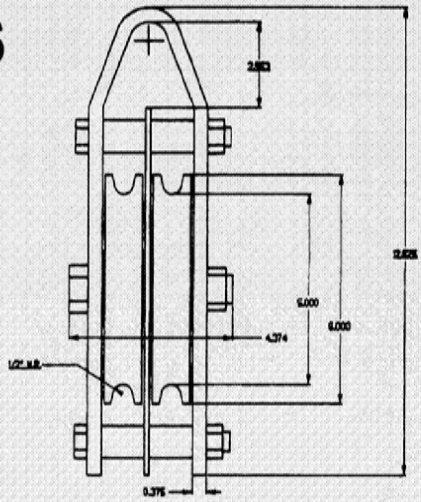

BCM TRAWL BLOCK
Specifications

	Block Number	A	B	C	D	E	Weight
Half Side	**BCM 6" 5-Ton**	14	3.00	2.50	2.00	N/A	25 lbs
	BCM 8" 10-Ton	19	4.25	2.63	2.50	N/A	41 lbs
	BCM 12" 10-Ton	23	4.50	3.50	2.50	N/A	79 lbs
	BCM 16" 20-Ton	28	4.50	3.50	3.00	N/A	132 lbs
	BCM 18" 20-Ton	31	4.50	3.50	3.00	N/A	151 lbs
	BCM 20" 30-Ton	37	7.25	6.50	4.50	3	330 lbs
Full Side	**BCM 12" 10-Ton**	26	4.50	3.50	2.50	N/A	87 lbs
	BCM 16" 20-Ton	32	3.00	2.50	3.00	N/A	158 lbs
	BCM 18" 20-Ton	36	7.50	3.50	3.00	N/A	205 lbs
	BCM 18" 25-Ton	39	7.00	5.00	4.50	3	315 lbs
	BCM 20" 30-Ton	41	7.50	6.50	4.50	3	370 lbs

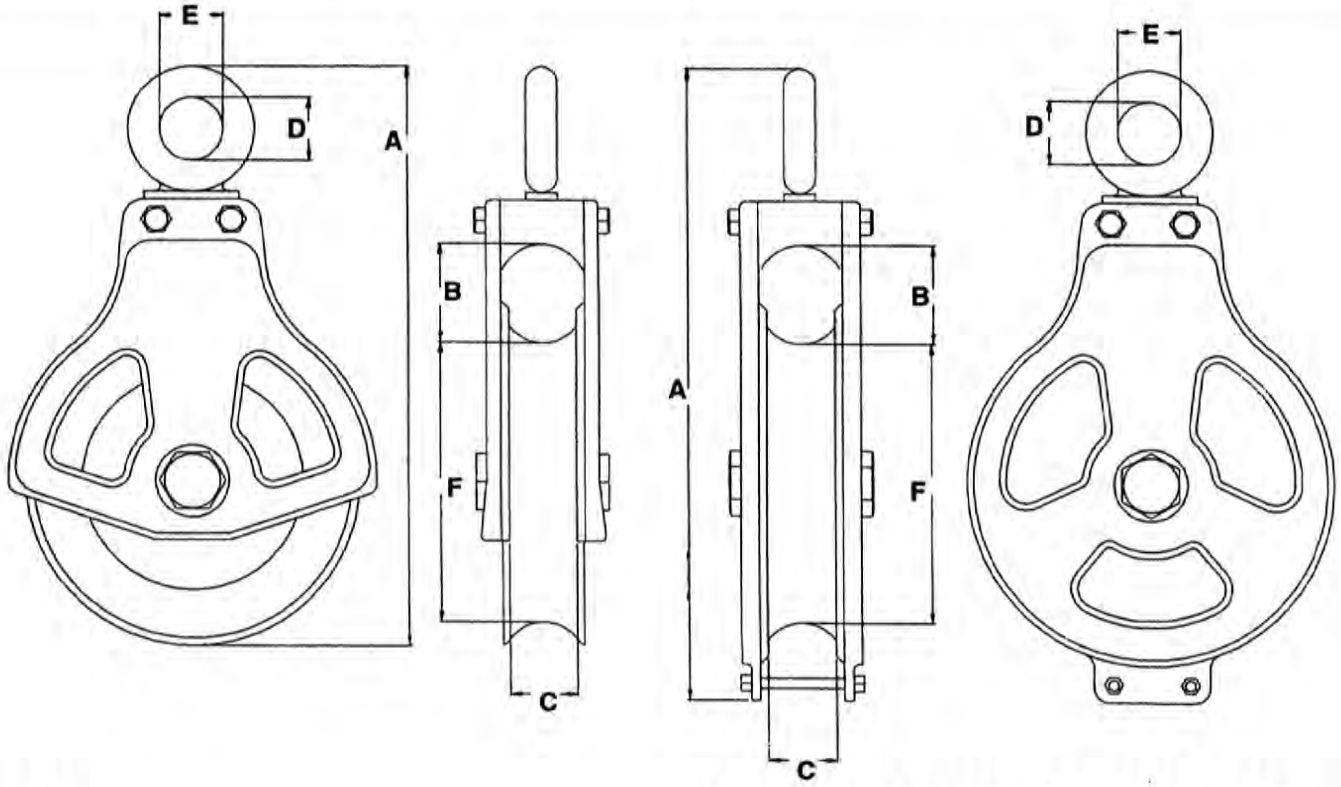

Made in USA

SKOOKUM®
BLOCKS AND RIGGING *Since 1890*

1-800-547-8211 **For a Dealer Near You**
P.O. Box 280 • Hubbard, OR 97032 U.S.A. • Fax: (503) 6
An Ulven Company

ROPE MASTER®
BLOCKS

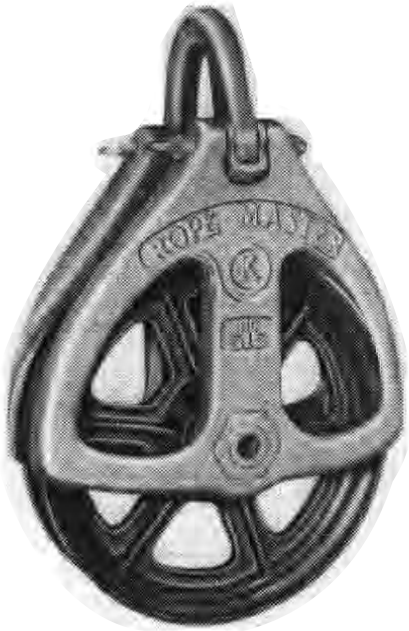

RS/RB

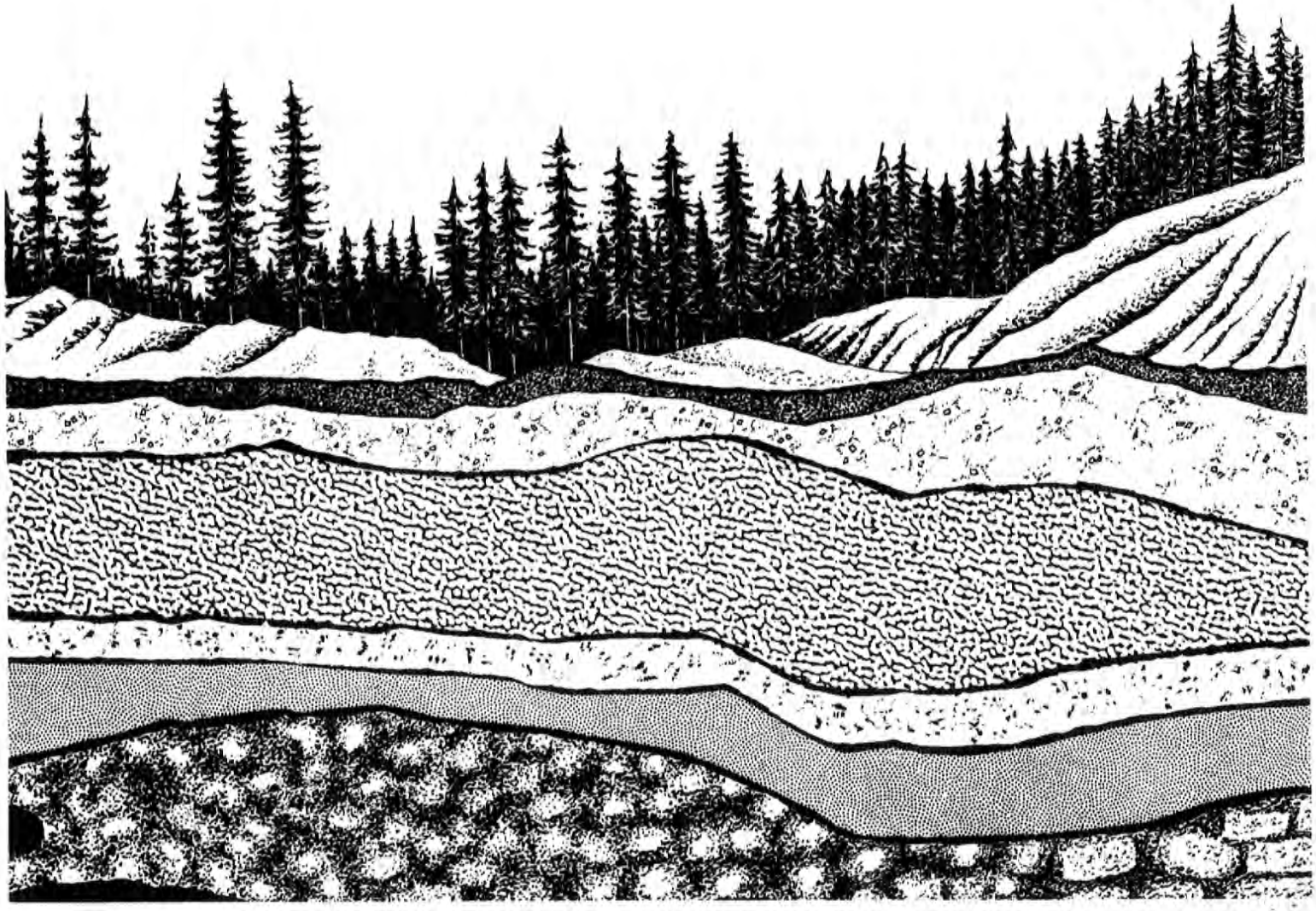

8 REASONS FOR SPECIFYING ROPE MASTER

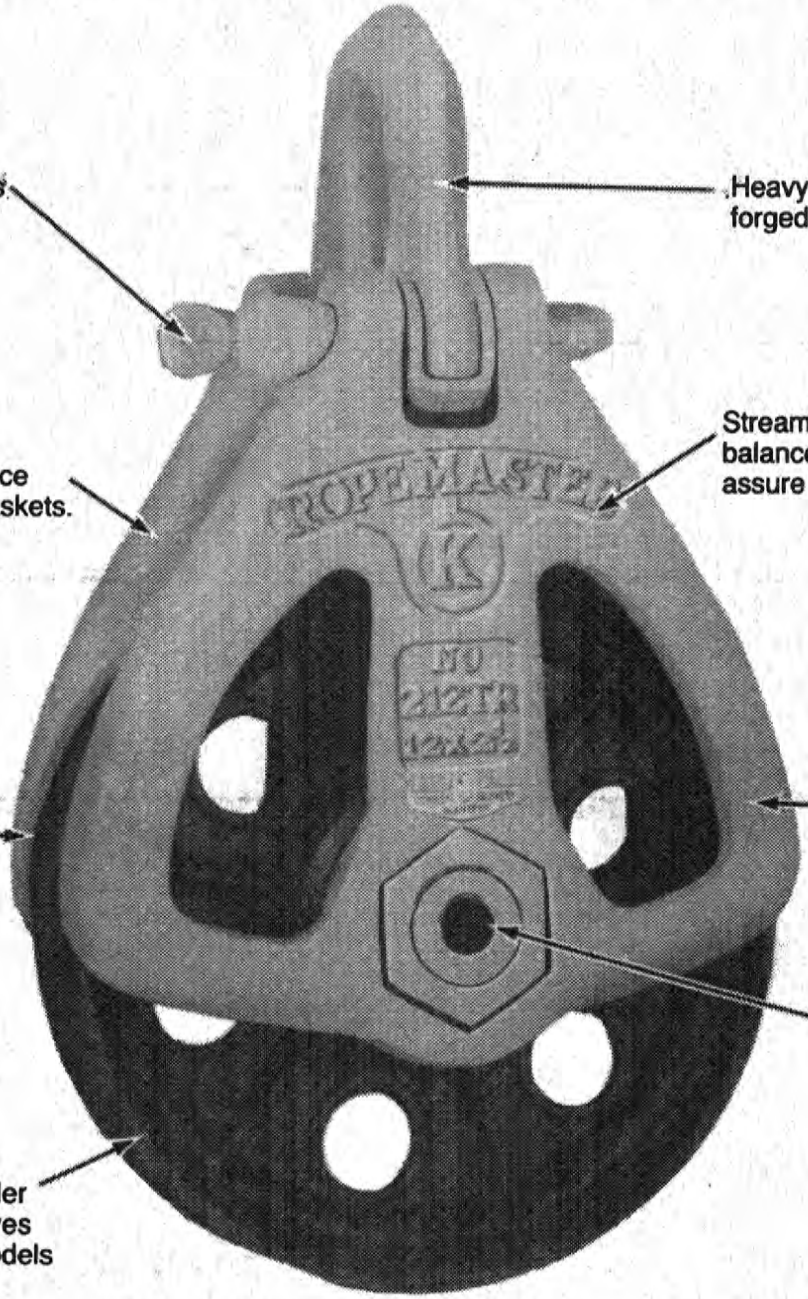

Large alloy steel draw pins secure fittings.

Heavy duty alloy steel shackle is forged for extra strength.

Streamlined design and precision balance eliminate fouling and assure faster, positive pick-up.

Positive grease seals reduce maintenance. No flimsy gaskets.

Lightweight tubiform construction *can't be beat* because it can take a beating.

Sheave is recessed in block to prevent binding.

Liberal size Timken® Tapered Roller Bearings for long life.

Manganese sheaves. The more they're used the harder they get. (Alloy steel sheaves are used on lightweight models 513 and 515).

Tapered Roller TIMKEN BEARING EQUIPPED

Timken is a registered trademark of The Timken Company

Fittings available according to block design.

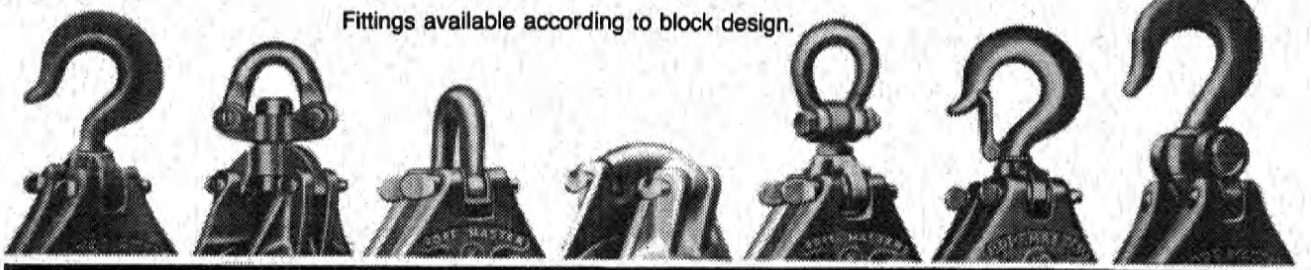

SWIVEL HOOK	YOKE TYPE SWIVEL SHACKLE	PLAIN SHACKLE	FLAT SHACKLE	SWIVEL SHACKLE	SAFETY SWIVEL HOOK	SNATCH LOCK

HALF SIDE BLOCKS

MEDIUM DUTY

TIMKEN EQUIPPED

	Block Number	Line Size	Sheave Size	Throat Width	Opening Height	Weight (with shackle)	Bearing Assembly	Type of Side	Working Load*
Medium Duty	**106**	3/8 to 1/2	6 x 1.50	2.13	2.25	21 lbs	Timken	Half	**12,500 lbs**
	108R	1/2 to 5/8	8 x 1.50	2.25	2.25	30 lbs	Timken	Half	**16,000 lbs**
	110R	1/2 to 5/8	10 x 1.75	2.25	2.75	38 lbs	Timken	Half	**16,000 lbs**
	112R	1/2 to 5/8	12 x 1.75	2.25	3.50	47 lbs	Timken	Half	**16,000 lbs**

*Design factor is 5 to 1 with plain shackle.

	Block Number	Line Size	Sheave Size	Throat Width	Opening Height	Weight (with shackle)	Bearing Assembly	Type of Side	Working Load*
Light weight Heavy Duty	**513A**	3/4 to 7/8	13 x 2.50	2.25	2.50	63 lbs	Timken	Half	**30,000 lbs**
	515A	7/8 to 1	15 x 2.50	2.50	2.50	73 lbs	Timken	Half	**30,000 lbs**
	515HDA	7/8 to 1	15 x 2.50	2.50	2.50	80 lbs	Timken	Half	**30,000 lbs**

*Design factor is 5 to 1 with plain shackle.

	Block Number	Line Size	Sheave Size	Throat Width	Opening Height	Weight (with shackle)	Bearing Assembly	Type of Side	Working Load*
Heavy Duty	**210TR**	3/4 to 7/8	10 x 2.50	2.75	2.50	59 lbs	Timken	Half	**30,000 lbs**
	212TR	3/4 to 7/8	12 x 2.50	2.75	2.75	69 lbs	Timken	Half	**30,000 lbs**
	215TR	3/4 to 7/8	15 x 2.50	2.75	5.00	90 lbs	Timken	Half	**30,000 lbs**

*Design factor is 5 to 1 with plain shackle.

	Block Number	Line Size	Sheave Size	Throat Width	Opening Height	Weight (with shackle)	Bearing Assembly	Type of Side	Working Load*
Super Duty	**212R**	3/4 to 1	10 x 2.50	2.75	2.50	74 lbs	Timken	Half	**30,000 lbs**
	214R	3/4 to 1	14 x 2.50	2.63	4.00	89 lbs	Timken	Half	**35,000 lbs**
	218TR	7/8 to 1-1/8	14 x 2.50	2.63	4.00	185 lbs	Timken	Half	**35,000 lbs**

*Design factor is 5 to 1 with plain shackle.

FULL SIDE BLOCKS

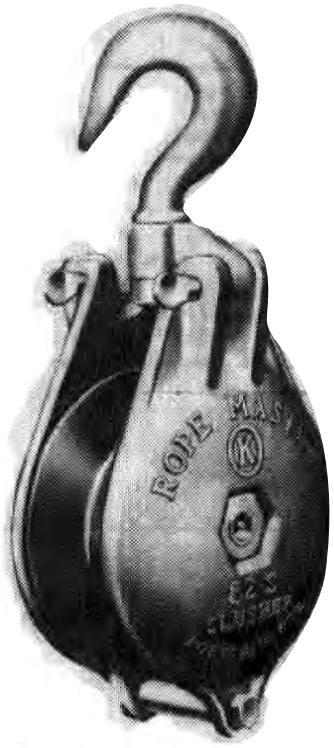

Block Number	Line Size	Sheave Size	Throat Width	Opening Height	Weight Swivel Attachment	Weight Plain Shackle	Working Load Limit* Swivel Attachment	Working Load Limit* Plain Shackle
6	3/8 to 1/2	6 x 2.75	2.50	2.13	22 lbs	-----	**6,500 lbs**	**7,500 lbs**
8	38 to 1/2	8 x 2.75	2.50	2.13	26 lbs	-----	**6,500 lbs**	**7,500 lbs**
62-S	3/8 to 1/2	6 x 3	2.75	2.50	27 lbs	26 lbs	**7,500 lbs**	**8,500 lbs**
82-S	3/8 to 1/2	8 x 3	2.75	2.50	34 lbs	33 lbs	**7,500 lbs**	**9,500 lbs**
1102-S	1/2 to 5/8	10 x 3.375	3.25	3.13	-----	52 lbs	**8,500 lbs**	**12,000 lbs**
78	3/8 to 1/2	8 x 2	2.38	2.50	39 lbs	38 lbs	**8,500 lbs**	**10,000 lbs**
102	1/2 to 5/8	10 x 2.25	2.63	2.75	51 lbs	50 lbs	**8,500 lbs**	**10,000 lbs**
410-R	5/8 to 3/4	10 x 1.75	2.25	2.75	47 lbs	45 lbs	**10,000 lbs**	**16.000 lbs**
412-R	3/4 to 7/8	12 x 2.50	2.75	2.75	93 lbs	85 lbs	**14,600 lbs**	**30,000 lbs**
812	3/4 to 7/8	12 x 3.75	4.00	4.75	106 lbs	100 lbs	**22,000 lbs**	**30,000 lbs**
814	3/4 to 7/8	14 x 3.5	4.25	3.75	162 lbs	155 lbs	**22,000 lbs**	**30,000 lbs**
820	1 to 1-1/4	20 x 4.25	5.00	6.00	315 lbs	300 lbs	**30,000 lbs**	**40,000 lbs**

*Design factor is 5 to 1 with plain shackle and 4 to 1 with swivel attachments.

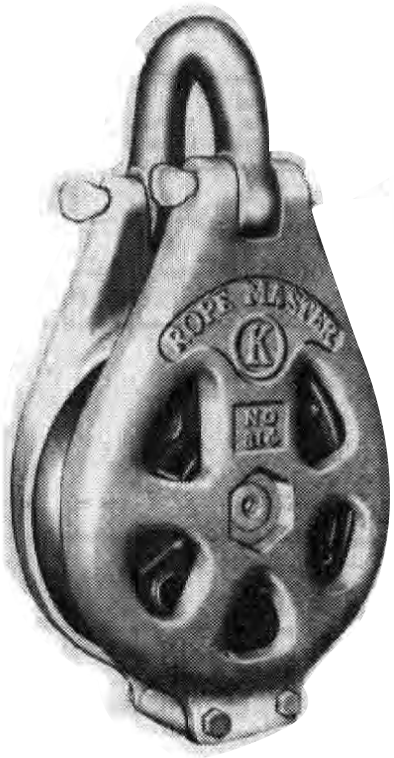

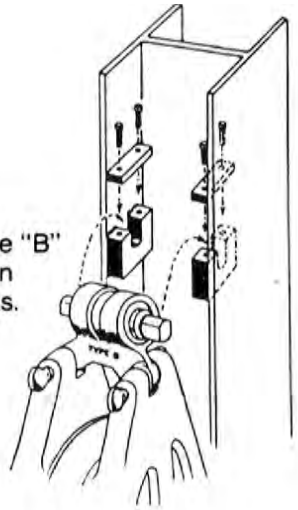

Typical installation Type "B" Crosshead. Available on 812, 814 and 820 blocks.

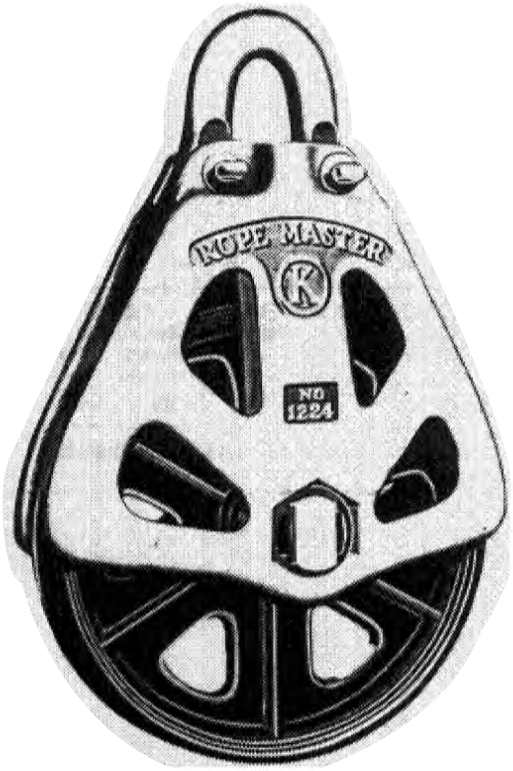

KNOCKDOWN BLOCKS

TIMKEN EQUIPPED

Block Number	Line Size	Sheave Size	Type of Side	Weight (with shackle)	Working Load*
1216	1 to 1-1/8	16 x 2.75	Half	120 lbs	**45,000 lbs**
1218R	1 to 1-1/8	18 x 2.50	Half	186 lbs	**45,000 lbs**
1220R	1-1/8 to 1-1/4	20 x 3	Half	240 lbs	**45,000 lbs**
1224	1-1/8 to 1-1/4	24 x 3	Half	310 lbs	**55,000 lbs**
2224	1-1/8	24 x 3	Half	256 lbs	**45,000 lbs**

*Design factor is 5 to 1 with plain shackle.

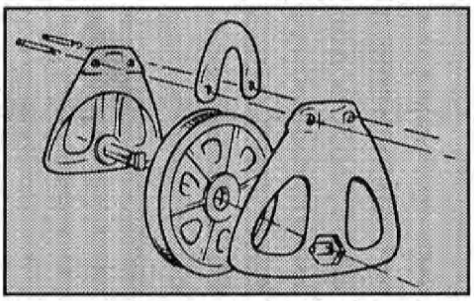

Disassembles without tools

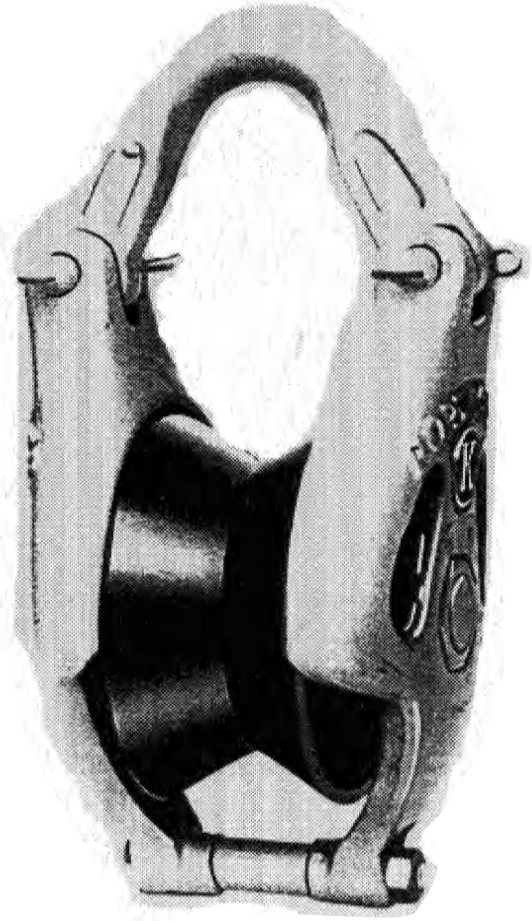

RIG-UP BLOCKS

TIMKEN EQUIPPED

Block Number	Line Size	Sheave Size	Throat Width	Opening Height	Type of Side	Weight (with shackle)	Working Load*
63	3/8 to 1/2	6 x 3	3.50	2.50	Tail Bolt	26 lbs	**15,000 lbs**
83	1/2 to 5/8	8 x 3	4.50	4.75	Full	42 lbs	**15,000 lbs**
506	3/8 to 5/8	6 x 2	3.00	2.50	Half	24 lbs	**15,000 lbs**
508	1 to 1-1/4	8 x 4.25	5.50	6.00	Half	72 lbs	**30,000 lbs**

*Design factor is 5 to 1 with plain shackle.

RAISE BLOCKS

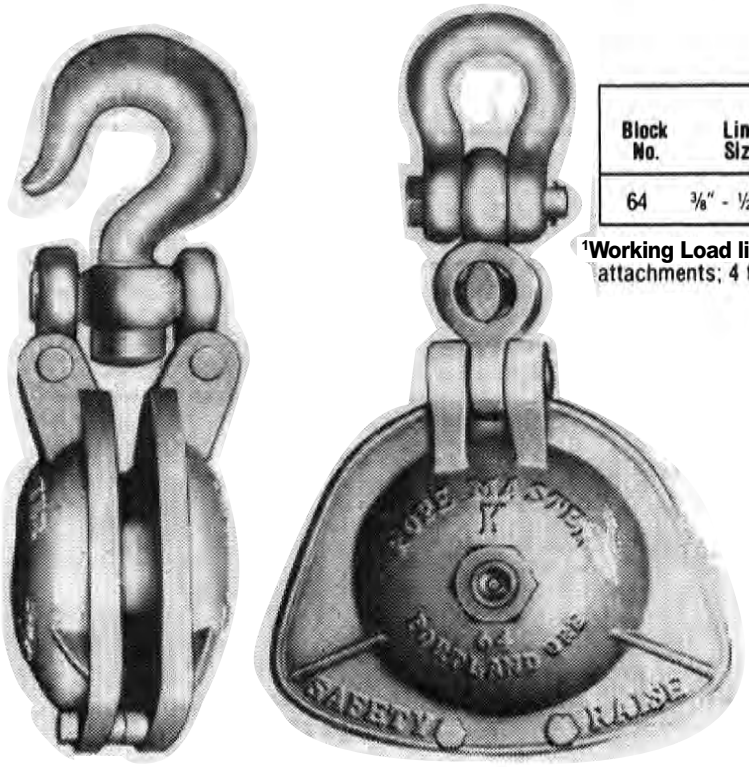

Block No.	Line Size	Sheave Size	WORKING LOAD LIMIT Swivel Attachment	WORKING LOAD LIMIT Plain Shackle	THROAT OPENING Width	THROAT OPENING Height	WEIGHT Swivel Attachment	WEIGHT Plain Shackle
64	3/8" - 1/2"	6" x 1 1/2"	7,500 lbs.	—	7/8"	2 1/4"	30 lbs.	—

[1]**Working Load limit.** Design factor is 5 to 1 with plain shackle and with swivel shackle attachments; 4 to 1 with swivel hook attachment.

Inside RopeMaster Blocks

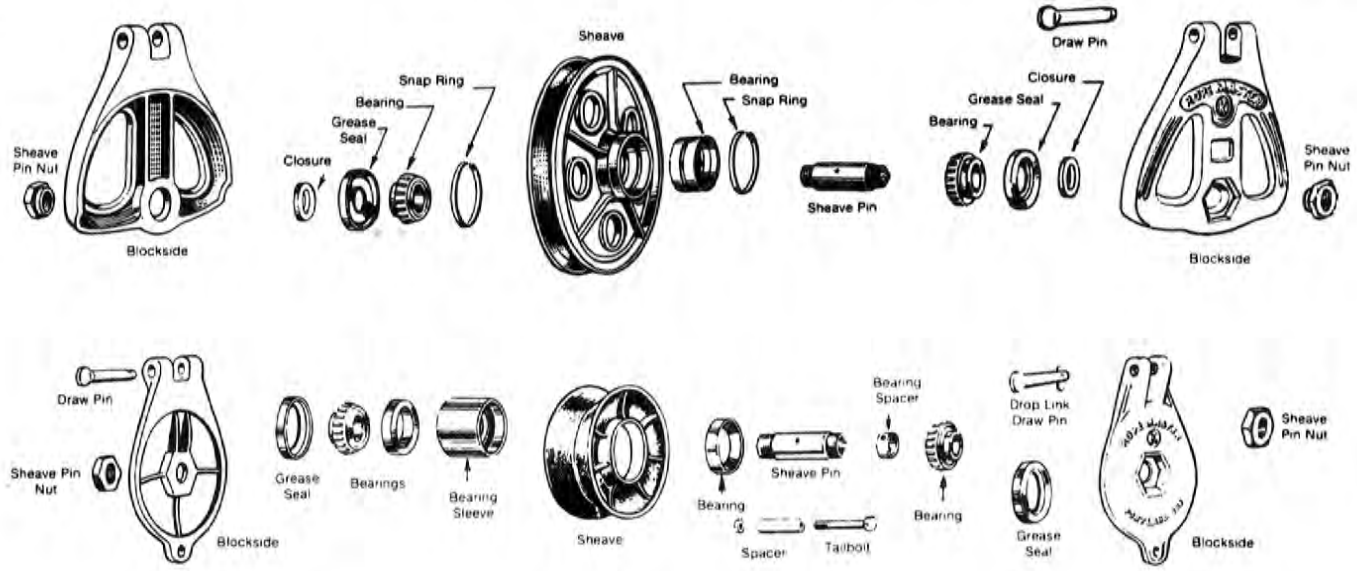

Rope Master / Skookum

HOISTING BLOCKS: Built to Your Requirements

ALSO AVAILABLE IN OVAL PATTERN

BRONZE BEARINGS — OILITE BEARINGS — GRAPHITE BRONZE BEARINGS — ROLLER BEARINGS

Sheave Sizes	No. Sheaves	Line Sizes	Load Ratings
4" to 60"	Any Number	1/4" to 2 1/2"	1/2 ton to 500 tons

All Rope Master/Skookum Blocks Feature:

- **Heavy-duty-steel construction.**
- **"Long-Life" manganese-steel sheaves or heavy-duty cast-steel sheaves.**
- **Large-diameter sheave pins of cold-drawn or ground-and-polished stress-proof steel.**
- **Bronze bearings or roller-bearings. (Pressure lubricated)**
- **"Gold Standard" forged-alloy-steel block attachments.**
- **Complete selection of optional block attachments.**
- **Special bronze thrust washers which reduce the need to replace sheaves.**
- **Design factor - ultimate strength is 4 times working load limit.**

Please furnish the following when ordering:

1. **Maximum Load**
2. **Sheave Diameter**
3. **Number of Sheaves**
4. **Sheave Material: Manganese Steel or Cast Steel**
5. **Pattern - Diamond of Oval**
6. **Type of Bearing**
7. **Line Size**
8. **Type Hanging Device**

Rope Master / Skookum

HOISTING BLOCKS: Optional Attachments

Front Shackle

Lashing Shackle

Stiff Swivel Hook

Loose Hook

Swivel Shackle and Plain Becket

Lashing Shackle and Becket Shackle

When using the following as a reference, please identify by name.

Front Shackle

Lashing Shackle

Front and Upset Shackle

Side and Upset Shackle

Stiff Swivel Eye

Loose Swivel Eye

Loose Swivel and Shackle

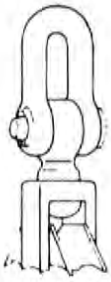
Stiff Swivel and Shackle

Swivel Gooseneck Eye

Loose Swivel Elongated Eye

Stiff Swivel Elongated Eye

Stiff Swivel Upset Shackle

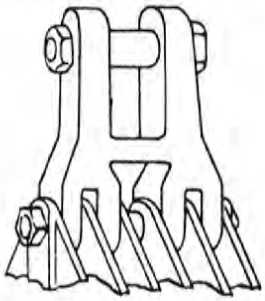
Extended Jaw Clevis

Stiff Swivel Hook

Swinging Swivel Hook

Since 1890

SKOOKUM FAIRLEADS & LEAD SHEAVES

RS/FL

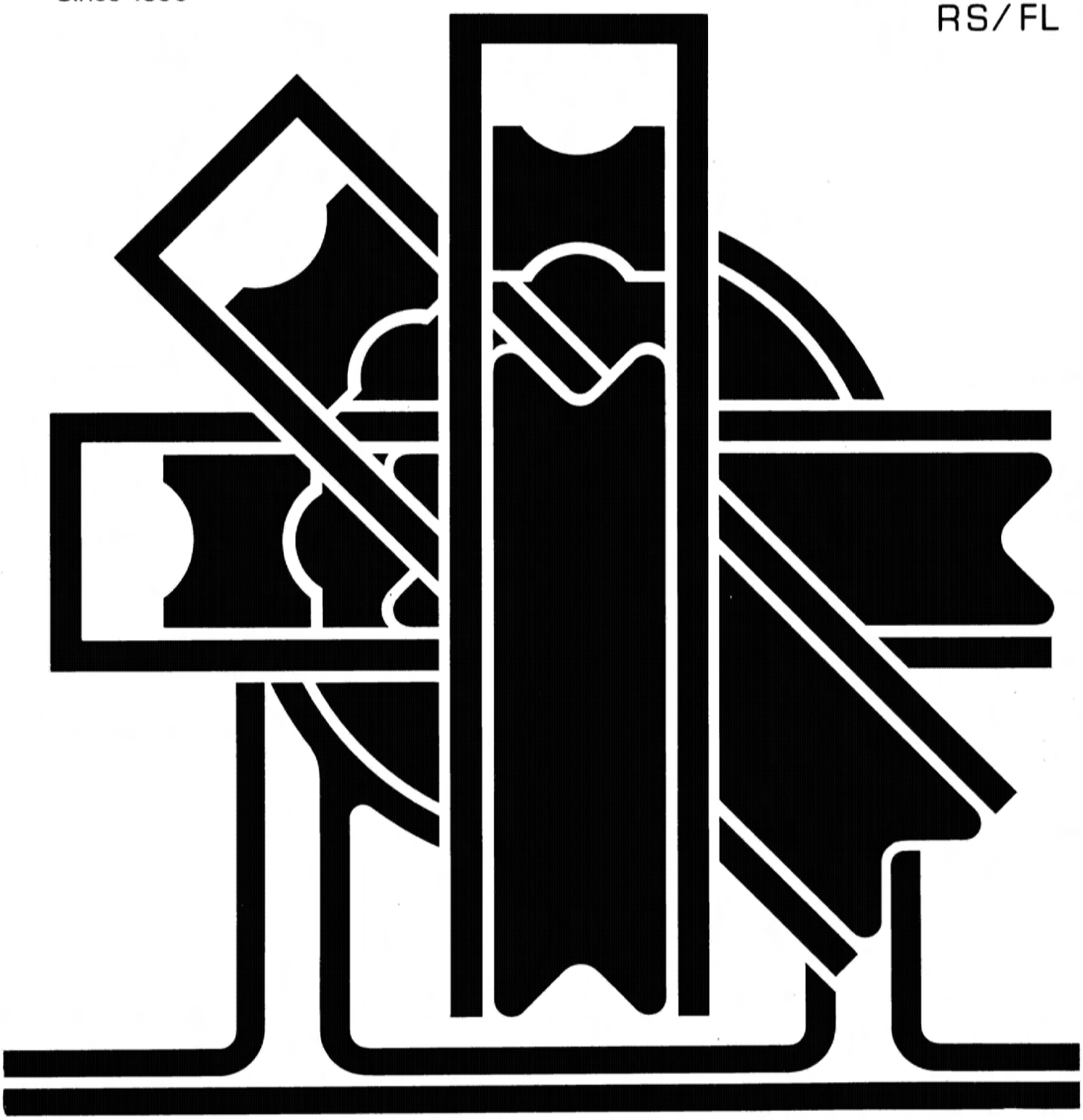

SKOOKUM®

Balanced Head Fairleads Deck Mounted

- Available as standard and wide throat (mooring) models for easy passing of wire rope eyes, splices and shackles
- Hadfield manganese sheaves
- Timken® sheave bearings
- Bronze bushed sheaves with stainless steel pins available on request
- Head revolves 360° on Timken® bearings
- "Stressproof" steel pins
- Will withstand the breaking strength of the specified wire rope at 90° angles.

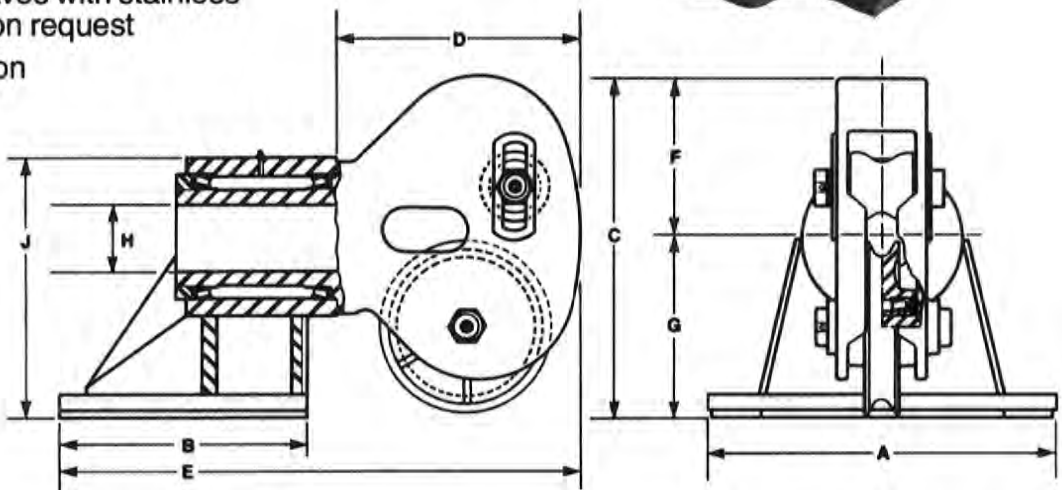

Model Number		Wire Rope Size[1]	Sheave Dia.[1]	Bolt Hole Dia.	A	B	C	D	E	F	G	H	I	LBS KGS
F-6	in.	3/8	6	0.94	9.25	7.50	12.06	8.13	13.44	5.25	6.81	2.00	9.56	70
F-7	in.	1/2	7	0.81	11.00	8.00	14.50	9.25	15.50	6.38	8.13	3.13	11.63	105
F-80[2]	in.	1/2 to 3/4	8	0.81	15.25	7.50	16.13	10.50	17.50	7.25	8.75	5.25	13.75	170
F-10	in.	3/4 to 1	10	1.03	20.00	12.00	19.25	14.25	24.50	8.75	10.50	3.00	15.00	435
F-100[2]	in.	3/4 to 1	10	1.03	12.00	20.00	20.25	12.25	21.88	8.75	11.50	6.00	17.13	400
F-12B	in.	1 to 1-1/4	12	1.56	24.00	23.00	22.88	15.50	42.00	10.63	12.50	3.00	20.00	775
F-120[2]	in.	1 to 1-1/4	12	1.56	23.00	24.00	25.63	15.50	42.00	12.13	13.50	10.00	22.00	820
F-14A	in.	1-1/4 to 1-3/8	14	1.56	30.50	24.25	28.63	18.50	44.75	12.88	14.50	5.50	23.25	1350
F-140[2]	in.	1-1/4 to 1-3/8	14	1.56	26.00	32.00	27.13	18.50	44.75	12.63	14.50	12.00	25.00	1500
F-16A	in.	1-3/8 to 1-1/2	16	1.63	36.00	30.00	35.00	18.50	44.00	15.88	19.13	10.00	29.63	2500
F-18	in.	1-1/2 to 1-5/8	18	1.31	30.00	36.00	37.50	21.50	53.00	17.50	20.00	15.00	33.00	3000
F-24	in.	1-3/4	24	1.56	50.00	40.00	42.13	30.00	70.00	16.50	25.63	8.00	33.00	4500
F-26	in.	2	26	1.50	52.00	42.13	44.50	31.88	74.50	17.00	27.50	9.88	33.75	4586
F-300[2]	in.	2-3/4	30	1.81	54.00	45.00	61.00	38.00	83.00	28.00	33.00	13.00	47.00	8000

[1]Fairleads with sheave sizes of 12" and above are available with weld-down or bolt-down bases.

[2]Wide throat fairleads. These models are available without roller for mooring fairlead applications.

Model Number		Wire Rope Size[1]	Sheave Dia.[1]	Bolt Hole Dia.	A	B	C	D	E	F	G	H	I	LBS KGS
F-6	mm.	10	152	24	235	191	306	206	341	133	173	51	243	32
F-7	mm.	13	178	21	279	203	368	235	394	162	206	79	295	48
F-80[2]	mm.	13-19	203	21	387	191	410	267	445	184	222	133	349	77
F-10	mm.	19-25	254	26	508	305	489	362	622	222	267	76	381	197
F-100[2]	mm.	19-25	254	26	305	508	514	311	557	222	292	152	435	181
F-12B	mm.	25-32	305	40	610	584	581	394	1067	270	318	76	508	352
F-120[2]	mm.	25-32	305	40	584	610	651	394	1067	308	343	254	559	372
F-14A	mm.	32-35	356	40	775	616	727	470	1137	327	368	140	591	612
F-140[2]	mm.	32-35	356	40	660	813	689	470	1137	321	368	305	635	680
F-16A	mm.	35-38	406	41	914	762	889	470	1118	403	486	254	752	1134
F-18	mm.	38-41	457	33	762	914	953	546	1346	445	508	381	838	1368
F-24	mm.	44	610	40	1270	1016	1070	762	1778	419	651	203	838	2040
F-26	mm.	50	660	39	1320	1070	1130	810	1890	430	700	250	858	2080
F-30	mm.	70	762	46	1372	1143	1448	965	2108	660	787	292	1143	2948
F-300[2]	mm.	70	762	46	1372	1143	1549	965	2108	711	838	330	1194	3629

[1]Fairleads with sheave sizes of 12" and above are available with weld-down or bolt-down bases.

[2]Wide throat fairleads. These models are available without roller for mooring fairlead applications.

SKOOKUM®

Balanced Head Fairleads Flange Mounted

- Available as standard and wide throat (mooring) models for easy passing of wire rope eyes, splices and shackles
- Hadfield manganese sheaves
- Timken® sheave bearings
- Bronze bushed sheaves with stainless steel pins available on request
- Head revolves 360° on Timken® bearings
- "Stressproof" steel pins
- Will withstand the breaking strength of the specified wire rope at 90° angles

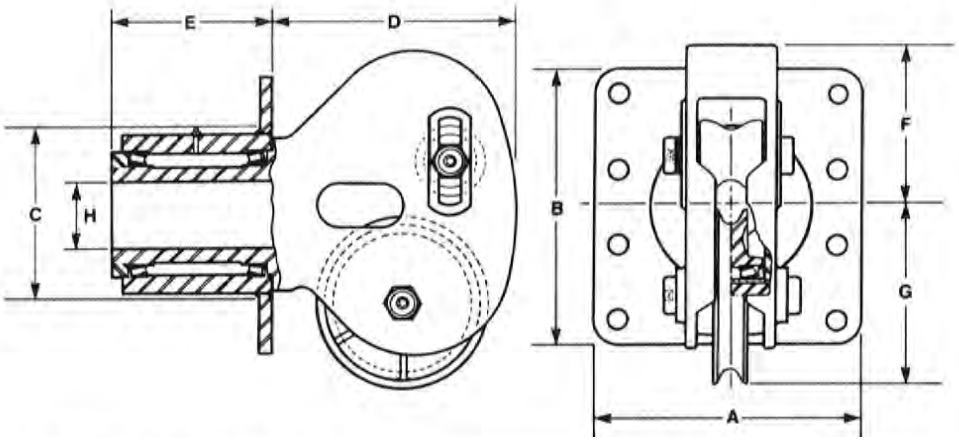

Model Number		Wire Rope Size[1]	Sheave Dia.[1]	Bolt Hole Dia.	Side A	Side B	C	D	E	F	G	H	No. Bolt Holes	LBS. KGS.
FF-6	in.	3/8	6	0.94	10.00	10.00	6.50	8.13	5.25	5.25	6.81	2.00	4	70
FF-7	in.	1/2	7	0.94	10.00	10.00	8.00	9.25	5.00	6.38	8.13	3.13	4	105
SK88F	in.	1/2 to3/4	8	0.81	14.00	14.00	10.50	10.50	6.25	7.25	8.75	5.25	8	125
FF-10	in.	3/4 to 1	10	1.06	18.50	18.50	11.00	14.25	10.00	8.75	10.50	3.00	8	285
SK100F	in.	3/4 to 1	10	1.06	14.00	14.00	12.50	12.25	7.50	8.75	11.50	6.00	8	295
FF-12B	in.	1 to 1-1/4	12	0.81	17.00	17.00	11.50	15.50	9.75	10.63	12.50	3.00	12	550
FF-120[2]	in.	1 to 1-1/4	12	0.81	17.00	17.00	14.50	15.50	9.50	12.13	13.50	10.00	12	570
FF-14A	in.	1-1/4 to 1-3/8	14	1.56	22.00	22.00	14.00	18.50	13.00	12.88	14.50	5.50	12	1200
FF-140[2]	in.	1-1/4 to 1-3/8	14	1.56	22.00	22.00	18.00	18.50	16.00	12.63	14.50	12.00	12	1250
FF-16A	in.	1-3/8 to 1-1/2	16	1.56	24.00	24.00	22.00	18.50	16.00	15.88	19.13	10.00	12	1450
FF-18	in.	1-1/2 to 1-5/8	18	1.56	24.00	24.00	24.00	21.50	16.00	17.50	20.00	15.00	12	2200
FF-24	in.	1-3/4	24	1.56	28.00	28.00	24.00	30.00	25.00	16.50	25.63	8.00	12	3000
FF-26	in.	2	26	1.56	28.00	28.00	24.00	31.88	25.00	17.00	27.50	9.88	12	3600
FF-30	in.	2-3/4	30	2.06	36.00	36.00	29.00	38.00	27.00	26.00	31.00	11.50	12	4500
FF-300[2]	in.	2-3/4	30	2.06	36.00	36.00	30.00	38.00	31.25	28.00	31.75	13.00	12	5000

[1]Fairleads with sheave sizes of 12" and above are available with wled-down or bolt-down bases.

[2]Wide throat fairleads. These models are available without roller for mooring fairlead applications.

Model Number		Wire Rope Size[1]	Sheave Dia.[1]	Bolt Hole Dia.	Side A	Side B	C	D	E	F	G	H	No. Bolt Holes	LBS. KGS.
FF-6	mm.	9	152	24	254	254	165	206	133	133	173	51	4.00	31
FF-7	mm.	13	178	24	254	254	203	235	127	162	206	79	4.00	48
SK88F	mm.	13 to 19	203	21	356	356	267	267	159	184	222	133	8.00	57
FF-10	mm.	19 to 25	254	27	470	470	279	362	254	222	267	76	8.00	129
SK100F	mm.	19 to 25	254	27	356	356	318	311	191	222	292	152	8.00	134
FF-12B	mm.	25 to 32	305	21	432	432	292	394	248	270	318	76	12.00	250
FF-120[2]	mm.	25 to 32	305	21	432	432	368	394	241	308	343	254	12.00	259
FF-14A	mm.	32 to 35	356	40	559	559	356	470	330	327	368	140	12.00	544
FF-140[2]	mm.	32 to 35	356	40	559	559	457	470	406	321	368	305	12.00	567
FF-16A	mm.	35 to 38	406	40	610	610	559	470	406	403	486	254	12.00	658
FF-18	mm.	38 to 41	457	40	610	610	610	546	406	445	508	381	12.00	998
FF-24	mm.	44	610	40	711	711	610	762	635	419	651	203	12.00	1361
FF-26	mm.	50	660	40	711	711	610	810	635	430	700	250	12.00	1633
FF-30	mm.	70	762	52	914	914	737	965	686	660	787	292	12.00	2041
FF-300[2]	mm.	70	762	52	914	914	762	965	794	711	806	330	12.00	2268

[1]Fairleads with sheave sizes of 12" and above are available with wled-down or bolt-down bases.

[2]Wide throat fairleads. These models are available without roller for mooring fairlead applications.

SKOOKUM®

Balanced Head Fairleads Flange Mounted — Double Sheave

- Hadfield manganese sheaves
- Timken® sheave bearings[1]
- Head revolves 360° on Timken® bearings
- "Stressproof" steel pins
- Will withstand the breaking strength of the specified wire rope at 90° angles.

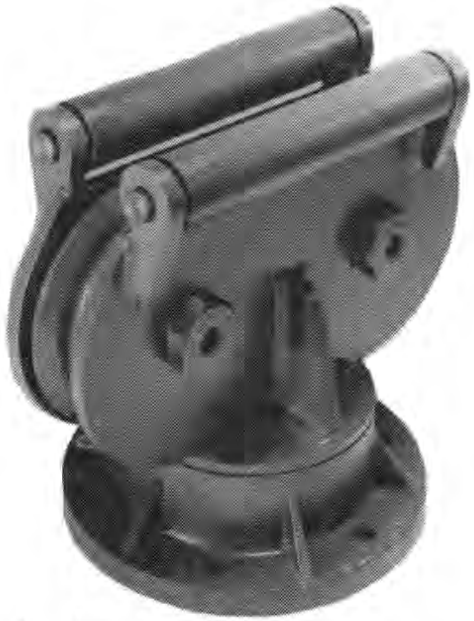

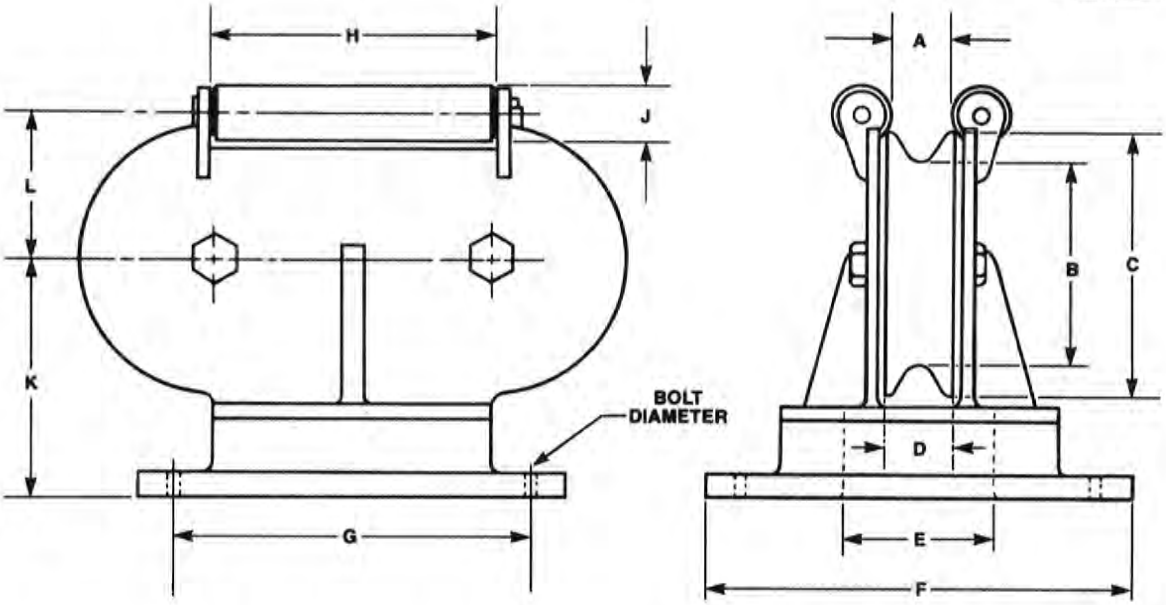

Model Number		Wire Rope Size[2]	A	B	C	D	E	F	G	H	I	J	K	Bolt Dia.	No. Bolt Holes	LBS. KGS.
UF 100-4	in.	To 3/8	1.00	2.75	4.00	1.38	3.00	10.00	8.38	4.44	1.50	6.38	2.69	0.50	6	53
UF 100-6	in.	To 1/2	1.88	4.63	6.00	2.00	4.00	12.13	10.00	9.50	2.25	7.25	3.88	0.63	6	125
UF 100-8	in.	To 5/8	1.88	6.00	8.00	2.25	4.00	12.13	10.00	12.00	2.25	8.25	4.88	0.63	6	155
UF 100-10	in.	To 3/4	1.88	8.50	10.00	2.00	4.00	12.13	10.00	14.50	2.25	9.25	5.88	0.63	6	185
UF 100-12	in.	To 7/8	2.38	10.00	12.00	2.50	5.38	15.75	13.50	18.44	2.25	11.75	7.00	0.75	6	360
UF 100-14	in.	To 7/8	2.38	12.00	14.00	2.50	5.38	15.75	13.50	20.44	2.25	12.75	8.00	0.75	6	400
UF 100-16	in.	To 1 1/4	3.63	13.50	16.00	4.00	6.50	19.00	16.25	20.44	3.00	13.25	9.25	0.88	8	525

[1]Roller sheave bearings on UF 100-4.

[2]Specify rope size when ordering.

Model Number		Wire Rope Size[2]	A	B	C	D	E	F	G	H	I	J	K	Bolt Dia.	No. Bolt Holes	LBS. KGS.
UF 100-4	mm.	10	25	70	102	35	76	254	213	113	38	162	68	13	6	32
UF 100-6	mm.	13	48	117	152	51	102	308	254	241	57	184	98	16	6	57
UF 100-8	mm.	16	48	152	203	57	102	308	254	305	57	210	124	16	6	70
UF 100-10	mm.	19	48	216	254	51	102	308	254	368	57	235	149	16	6	84
UF 100-12	mm.	22	60	254	305	64	137	400	343	468	57	298	178	19	6	163
UF 100-14	mm.	22	60	305	356	64	137	400	343	519	57	324	203	19	6	181
UF 100-16	mm.	32	92	343	406	102	165	483	413	618	76	337	235	22	8	238
UF 100-18	mm.	32	92	375	457	102	165	483	413	668	76	362	260	22	8	265

[1]Roller sheave bearings on UF 100-4.

[2]Specify rope size when ordering.

SKOOKUM®

Unbalanced Head Fairleads Flange Mounted — Single Sheave

- Hadfield manganese sheaves
- Timken® sheave bearings[1]
- Head revolves 360° on Timken® bearings
- "Stressproof" steel pins
- Will withstand the breaking strength of the specified wire rope at 90° angles.

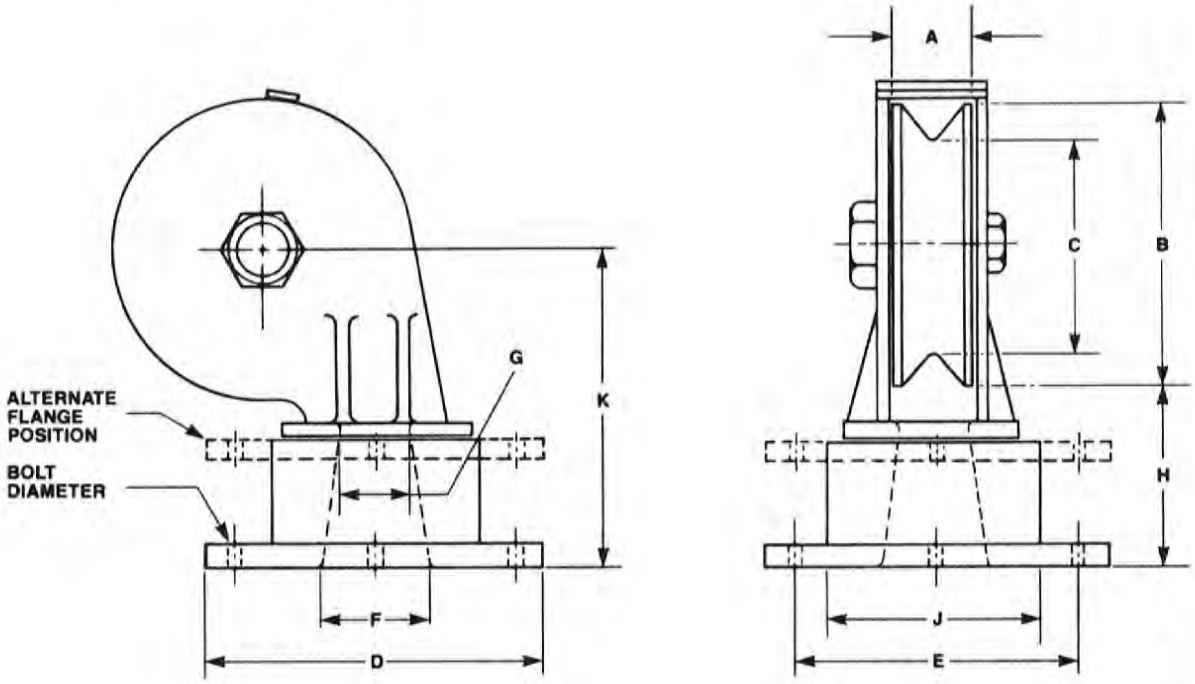

Model Number		Wire Rope Size[2]	A	B	C	D	E	F	G	H	I	J	Bolt Dia.	No. Bolt Holes	LBS. KGS.
UF 50-4	in.	To 3/8	1.38	4.00	2.75	8.00	6.75	1.63	1.63	4.75	5.00	6.75	0.50	4	25
UF 50-6	in.	To 1/2	2.00	6.00	4.63	9.75	7.88	2.00	2.00	5.25	6.25	8.25	0.63	6	70
UF 50-8	in.	To 5/8	2.25	8.00	6.00	9.75	7.88	2.00	2.00	5.25	6.25	9.25	0.63	6	85
UF 50-10	in.	To 3/4	2.00	10.00	8.50	9.75	7.88	2.00	2.00	5.25	6.25	10.25	0.63	6	95
UF 50-12	in.	To 7/8	2.50	12.00	10.00	15.00	12.88	4.25	3.00	7.38	10.75	13.38	0.88	6	240
UF 50-14	in.	To 7/8	2.50	14.00	12.00	15.00	12.88	4.25	3.00	7.38	10.75	14.38	0.88	6	265
UF 50-16	in.	To 1 1/4	4.00	16.00	13.50	18.50	15.50	4.75	3.50	8.19	12.50	6.19	1.13	8	570
UF 50-18	in.	To 1 1/4	4.00	18.00	14.75	18.50	15.50	4.75	3.50	8.19	12.50	7.19	1.13	8	600

[1]Roller sheave bearings on UF 50-4.

[2]Specify rope size when ordering.

Model Number		Wire Rope Size[2]	A	B	C	D	E	F	G	H	I	J	Bolt Dia.	No. Bolt Holes	LBS. KGS.
UF 50-4	mm.	10	35	102	70	203	171	41	41	121	127	171	13	4	16
UF 50-6	mm.	13	51	152	117	248	200	51	51	133	159	210	16	6	32
UF 50-8	mm.	16	57	203	152	248	200	51	51	133	159	235	16	6	39
UF 50-10	mm.	19	51	254	216	248	200	51	51	133	159	260	16	6	43
UF 50-12	mm.	22	64	305	254	381	327	108	76	187	273	340	22	6	109
UF 50-14	mm.	22	64	356	305	381	327	108	76	187	273	365	22	6	120
UF 50-16	mm.	32	102	406	343	470	394	121	89	208	318	411	29	8	259
UF 50-18	mm.	32	102	457	375	470	394	121	89	208	318	437	29	8	272

[1]Roller sheave bearings on UF 50-4.

[2]Specify rope size when ordering.

SKOOKUM®

Vertical Lead Sheaves

- Bronze bushed sheaves. Timken® roller bearings optional
- "Stressproof" steel pins
- Steel sheaves standard, other materials optional
- Weld-down or bolt-down bases
- Will withstand the breaking strength of the specified wire rope at 90º angles
- Available on request:
  — sheave sizes above 42″
  — double sheave models

* — custom dimensions

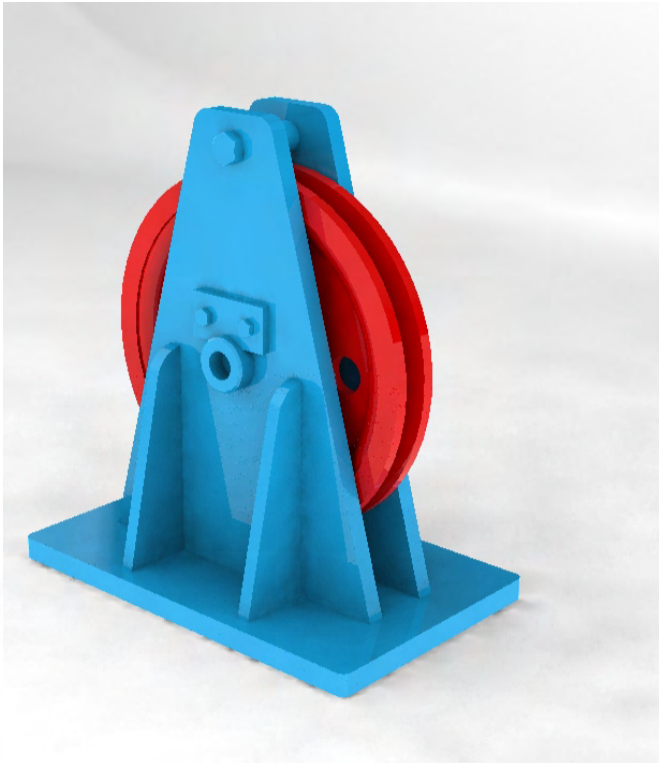

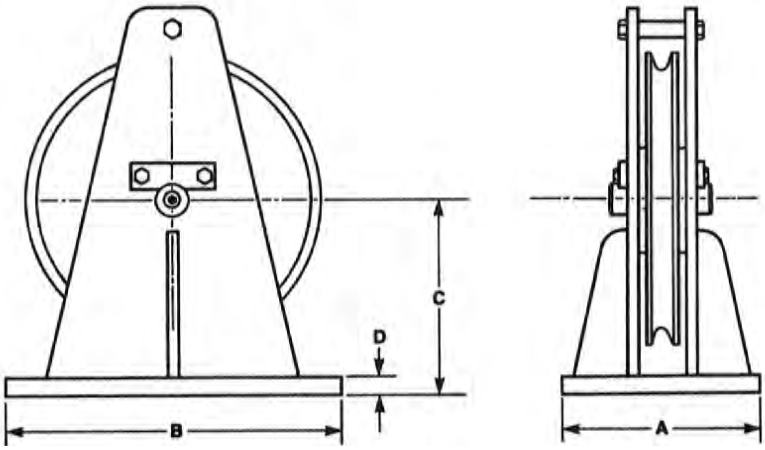

Model Number		Suggested Wire Rope Size	Sheave Dia	Pin Dia.	A Width	B Length	C Center of Pin	D Base Thickness
VLS-4	in.	1/4 to 3/8	4	0.75	4.00	6.00	3.00	0.50
VLS-6	in.	5/16 to 1/2	6	1.00	4.00	8.00	4.50	0.50
VLS-8	in.	3/8 to 5/8	8	1.50	6.50	10.00	6.00	0.63
VLS-12	in.	1/2 to 3/4	12	2.00	6.50	16.00	8.00	0.88
VLS-14	in.	5/8 to 3/4	14	2.50	9.50	16.00	9.00	0.88
VLS-16	in.	3/4 to 1	16	2.50	10.00	18.00	10.50	0.88
VLS-18	in.	3/4 to 1	18	2.25	11.00	19.00	12.50	1.00
VLS-20	in.	1 to 1-1/4	20	2.50	13.00	22.00	13.50	1.00
VLS-24	in.	7/8 to 1-1/4	24	2.75	16.50	26.00	15.00	1.00
VLS-30	in.	1-1/4 to 1-3/8	30	3.75	16.50	37.00	18.00	1.25
VLS-36	in.	1-3/8 to 1-3/4	36	7.50	22.00	40.00	21.00	1.50
VLS-42	in.	2 to 2-1/2	42	7.00	28.00	42.00	24.00	1.50

Model Number		Suggested Wire Rope Size	Sheave Dia	Pin Dia.	A Width	B Length	C Center of Pin	D Base Thickness
VLS-4	mm.	6 to 10	101	19	102	152	76	13
VLS-6	mm.	8 to 13	152	25	102	203	114	13
VLS-8	mm.	10 to 16	203	38	165	305	152	19
VLS-12	mm.	13 to 19	305	51	241	406	203	22
VLS-14	mm.	16 to 19	356	64	241	406	229	22
VLS-16	mm.	19 to 25	406	64	254	457	267	22
VLS-18	mm.	19 to 25	457	56	279	483	318	25
VLS-20	mm.	25 to 32	508	64	330	559	343	25
VLS-24	mm.	22 to 32	610	70	419	660	381	25
VLS-30	mm.	32 to 35	762	95	419	940	457	32
VLS-36	mm.	35 to 44	914	190	559	1016	533	38
VLS-42	mm.	51 to 64	1067	178	711	1067	610	38

SKOOKUM®

Horizontal Lead Sheaves

- Bronze bushed sheaves. Timken® roller bearings optional
- "Stressproof" steel pins
- Steel sheaves standard, other materials optional
- Weld-down or bolt-down bases
- Will withstand the breaking strength of the specified wire rope at 90º angles
- Available on request:
  — sheave sizes above 42″
  — double sheave models
- * — custom dimensions

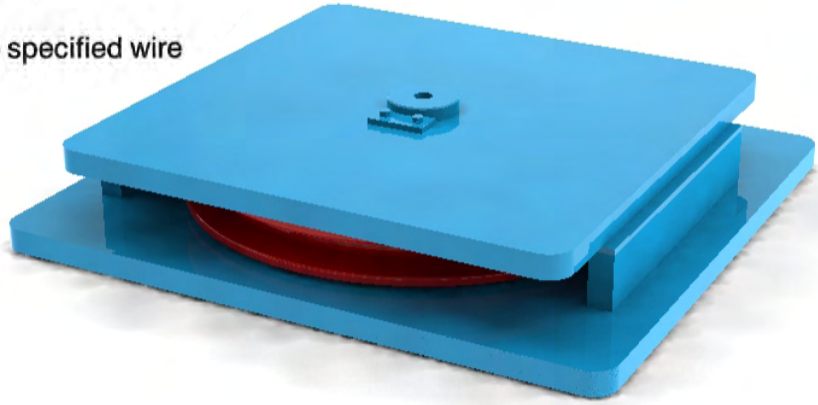

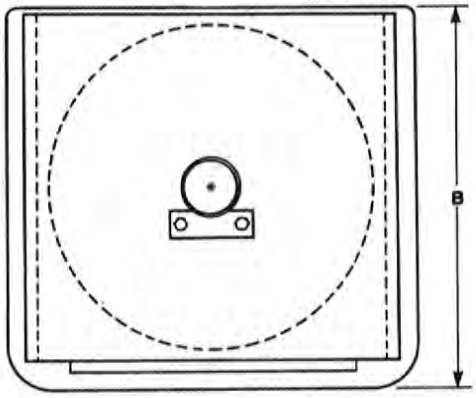

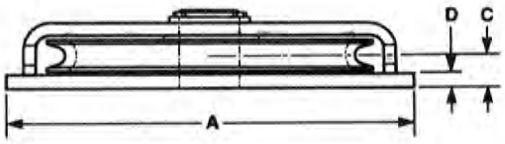

Model Number		Suggested Wire Rope Size	Sheave Dia.	Pin Dia.	A Width[1]	B Length	C Center of Sheave	D Base Thickness
HLS-8	in.	3/8 to 1/2	8	1.50	12.00	10.00	1.38	0.63
HLS-12	in.	1/4 to 5/8	12	2.00	18.00	18.00	1.75	0.75
HLS-14	in.	5/8 to 3/4	14	2.00	19.00	19.00	2.25	0.88
HLS-16	in.	3/4 to 7/8	16	3.50	21.00	21.00	2.50	0.88
HLS-18	in.	7/8 to 1	18	3.50	28.00	28.00	2.50	1.13
HLS-20	in.	1 to 1-1/4	20	4.50	22.50	23.50	2.75	1.25
HLS-24	in.	1 to 1-1/4	24	4.25	28.00	29.75	2.75	1.25
HLS-30	in.	1-1/4 to 1-1/2	30	6.50	38.00	38.00	4.25	1.50
HLS-36	in.	1-1/4 to 1-1/2	36	4.00	48.00	48.00	3.50	1.50
HLS-42	in.	2	42	6.50	48.00	59.00	3.88	2.00

[1]The A dimensions for HLS-8 through HLS-18 are for bolt-down style.

Model Number		Suggested Wire Rope Size	Sheave Dia.	Pin Dia.	A Width[1]	B Length	C Center of Sheave	D Base Thickness
HLS-8	mm.	10 to 13	203	38	305	254	35	16
HLS-12	mm.	6 to 16	305	51	457	457	44	19
HLS-14	mm.	16 to 19	356	51	483	483	57	22
HLS-16	mm.	16 to 19	406	89	533	533	64	22
HLS-18	mm.	22 to 25	457	89	711	711	64	29
HLS-20	mm.	22 to 32	508	114	572	597	70	32
HLS-24	mm.	22 to 32	610	108	711	756	70	32
HLS-30	mm.	32 to 38	762	165	965	965	108	38
HLS-36	mm.	32 to 38	914	102	1219	1219	89	38
HLS-42	mm.	51	1067	165	1219	1499	98	51

[1]The A dimensions for HLS-8 through HLS-18 are for bolt-down style.

*Note: Dimensions may vary from catalog based on wire rope size, loads and line pull.

SKOOKUM®

Horizontal Deck Sheaves

- Timken® sheave bearings. Bronze bushed optional
- "Stressproof" steel pins
- Heavy duty, extra wide manganese steel sheaves
- Available for wire and synthetic rope
- Will withstand the breaking strength of the specified wire rope at 90° angles

"O" STYLE

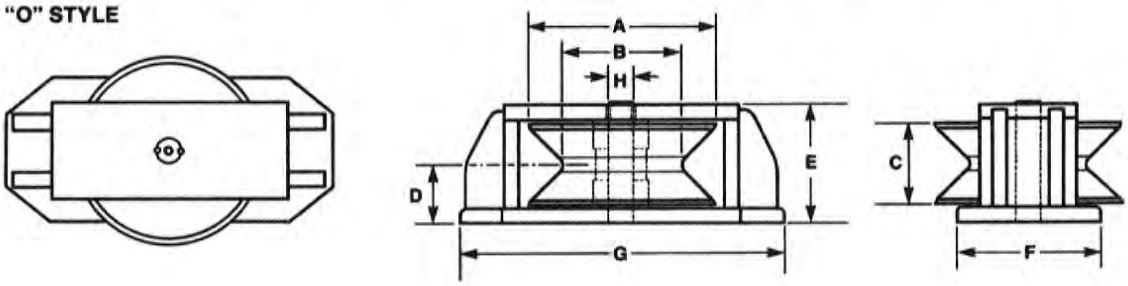

"R" STYLE

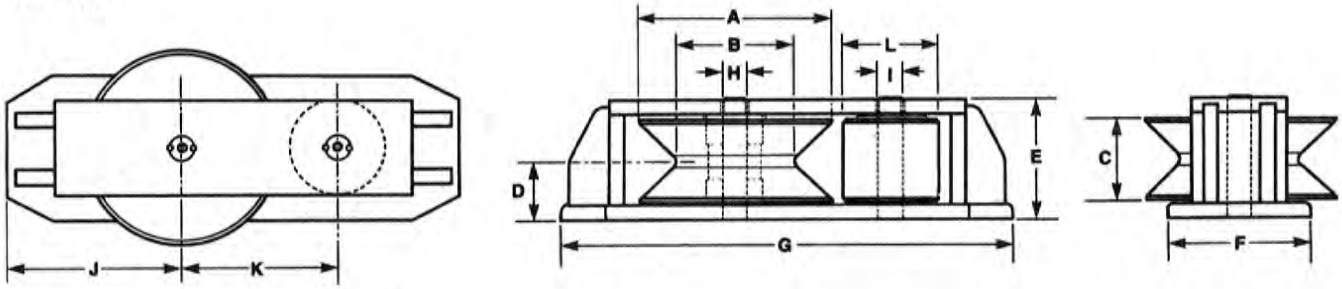

Model Number		Wire Rope Size	A	B	C	D	E	F	G	H	I	J	K	L	LBS. KGS.
DS-10W-O	in.	1 max	10	8.00	5.50	4.00	7.75	7.75	17.00	2.25					200
DS-16W-O	in.	1 1/4 max	16	10.00	7.00	5.00	10.00	12.00	27.00	2.00					360
DS-16W-R	in.	1 1/4 max	16	10.00	7.00	5.00	10.00	12.00	37.25	2.00	2.00	14.25	13.00	8.00	570
DS-24W-O	in.	1 3/8 max	24	18.50	7.00	5.13	10.25	18.00	35.00	2.00					621
DS-30W-O	in.	1 1/2 max	30	24.50	7.00	5.25	10.50	22.00	41.00	2.00					1000

Model Number		Wire Rope Size	A	B	C	D	E	F	G	H	I	J	K	L	LBS. KGS.
DS-10W-O	mm.	25 max	254	203	140	102	197	197	432	57					90
DS-16W-O	mm.	32 max	406	254	178	127	254	305	686	51					163
DS-16W-R	mm.	32 max	406	254	178	127	254	305	946	51	51	362	330	203	259
DS-24W-O	mm.	35 max	610	470	178	130	260	457	889	51					282
DS-30W-O	mm.	38 max	762	622	178	133	267	559	1041	51					454

SKOOKUM®
Roller Fairleads

- Alloy steel rollers, heat treated
- Bronze bushings
- "Stressproof" steel pins
- Bolt down bases

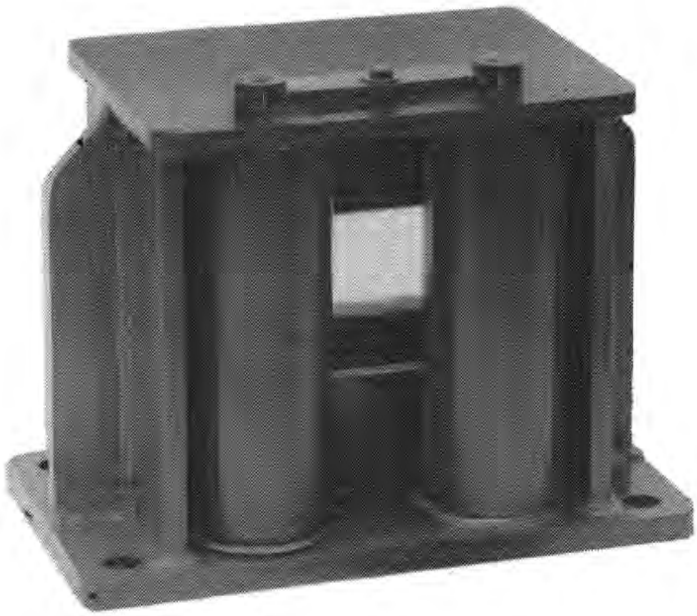

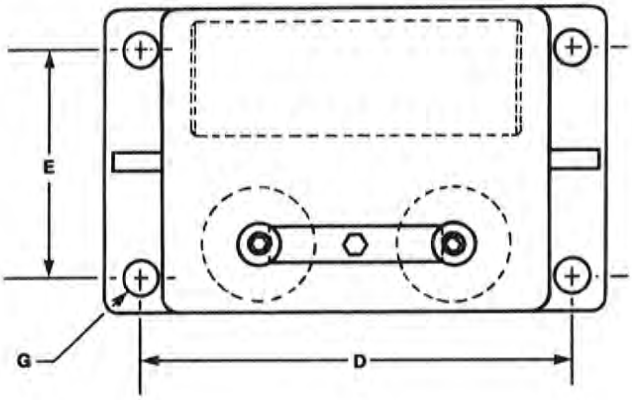

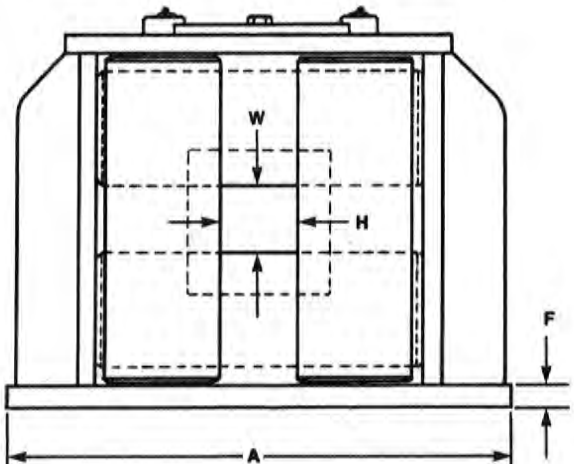

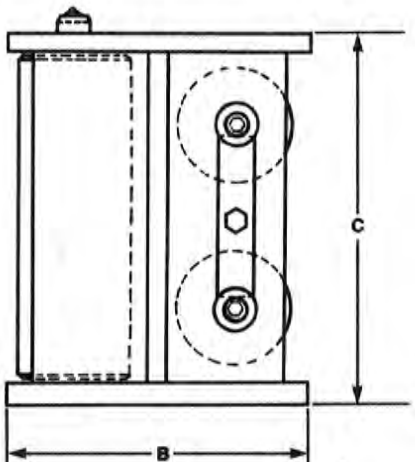

Model Number		Wire Rope Size	Vertical Roller	Horizontal Roller	Opening W x H	A	B	C	D	E	F	G	Roller Pin	No. Bolt Holes	LBS. KGS.
RF-O	in.	5/16 to 3/8	2.25 x 6.50	2.25 x 6.50	2.25 x 2.25	12.000	5.250	8.1875	10.250	3.875	0.500	25/32	1.000	4	52
RF-1	in.	1/2 to 7/8	4 x 11.375	4 x 11.375	2.75 x 2.75	17.500	10.500	13.125	15.000	8.000	0.750	1.063	1.375	4	235
RF-2	in.	1 to 1-1/4	6 x 15.375	5.00 x 11.00	5.00 x 4.00	26.000	17.000	18.500	22.000	12.500	1.125	1.531	1.500	4	700
RF-3	in.	1-3/4	8.00 x 22.50	8 x 22.50	6.5 x 6.5	36.750	23.000	27.125	31.000	8.000	1.500	1.813	3.000	6	2400

Model Number		Wire Rope Size	Vertical Roller	Horizontal Roller	Opening W x H	A	B	C	D	E	F	G	Roller Pin	No. Bolt Holes	LBS. KGS.
RF-O	mm.	8 to 10	57 x 165	57 x 165	57 x 57	305	133	208	260	98	13	20	25	4	24
RF-1	mm.	12 to 22	102 x 289	102 x 289	70 x 70	444	267	333	381	203	19	27	35	4	107
RF-2	mm.	25 to 32	152 x 391	127 x 279	127 x 102	660	432	470	559	318	29	39	38	4	318
RF-3	mm.	44	203 x 572	203 x 572	165 x 165	933	584	689	787	203	38	46	76	6	1089

SKOOKUM®
Custom Fairleads

ROPE MASTER/SKOOKUM has designed and manufactured fairleads and lead sheaves for a wide range of special applications. If your requirements cannot be met by the models shown on the previous pages, discuss your specifications with our engineers and let us recommend a design. We would be pleased to custom build for you to the same stringent quality standards of our regular product line.

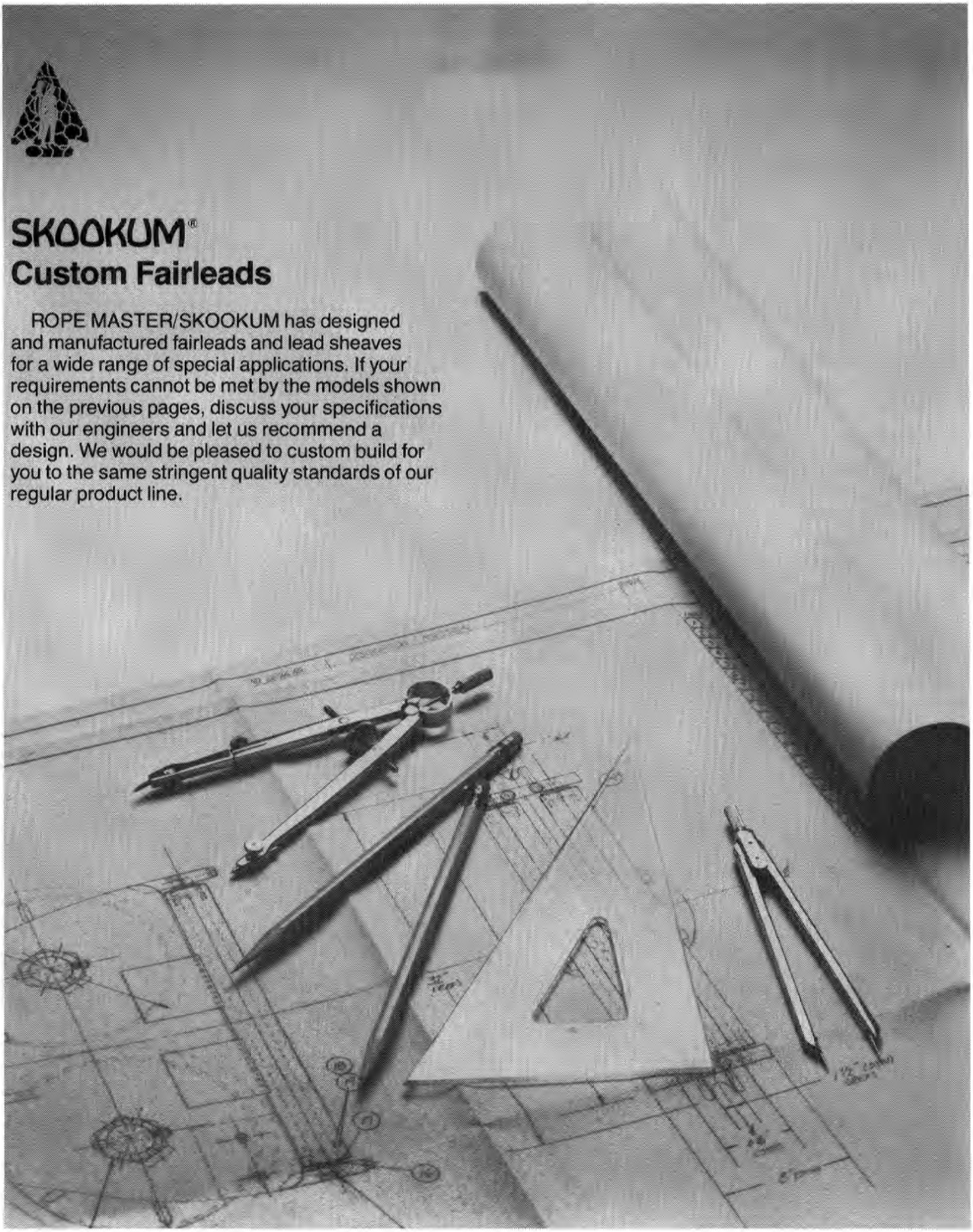

SKOOKUM®
SHEAVES

SINCE 1890

RS/S

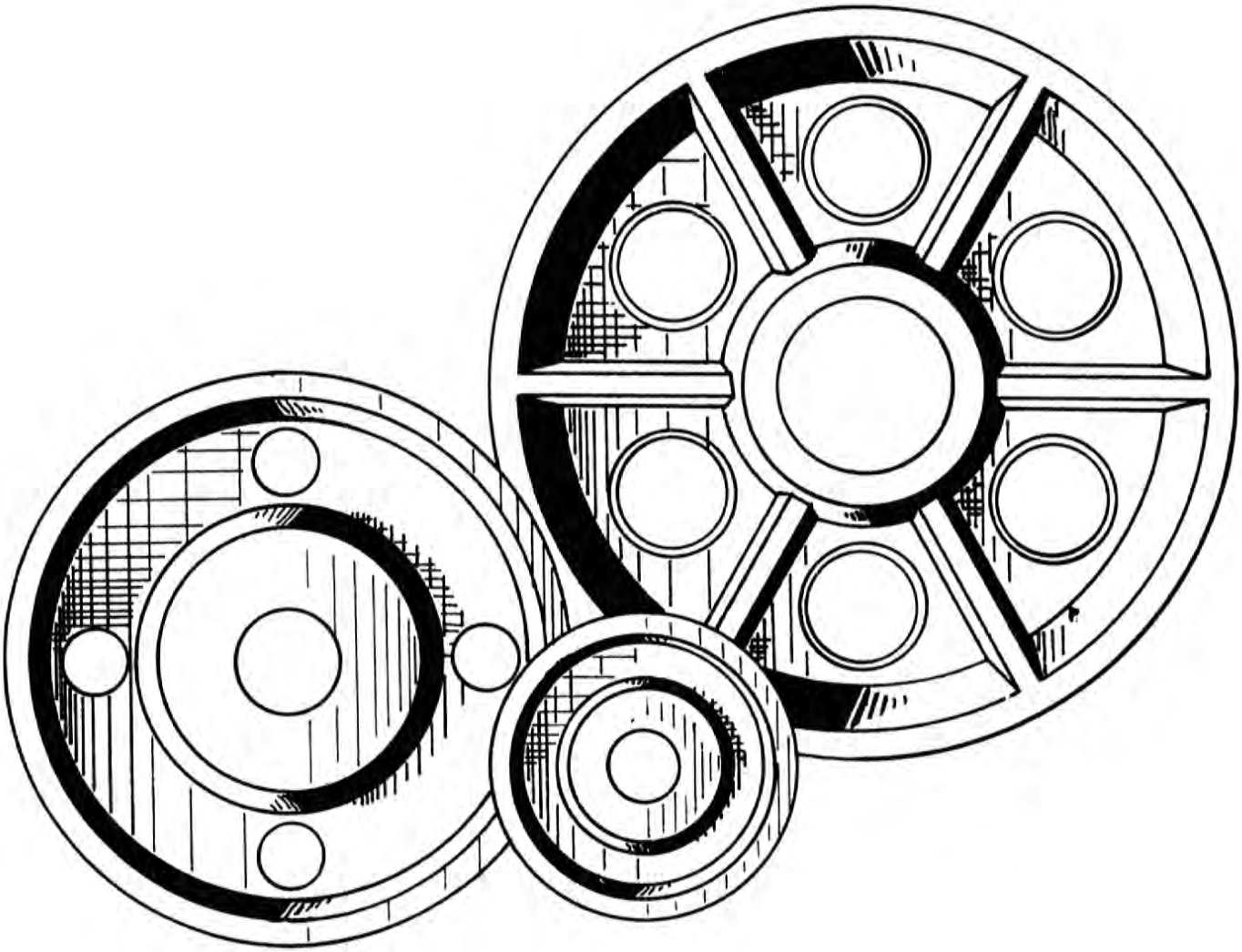

SKOOKUM®
LONG LIFE MANGANESE REPLACEMENT SHEAVES

Reduce your sheave and wire rope replacement frequency

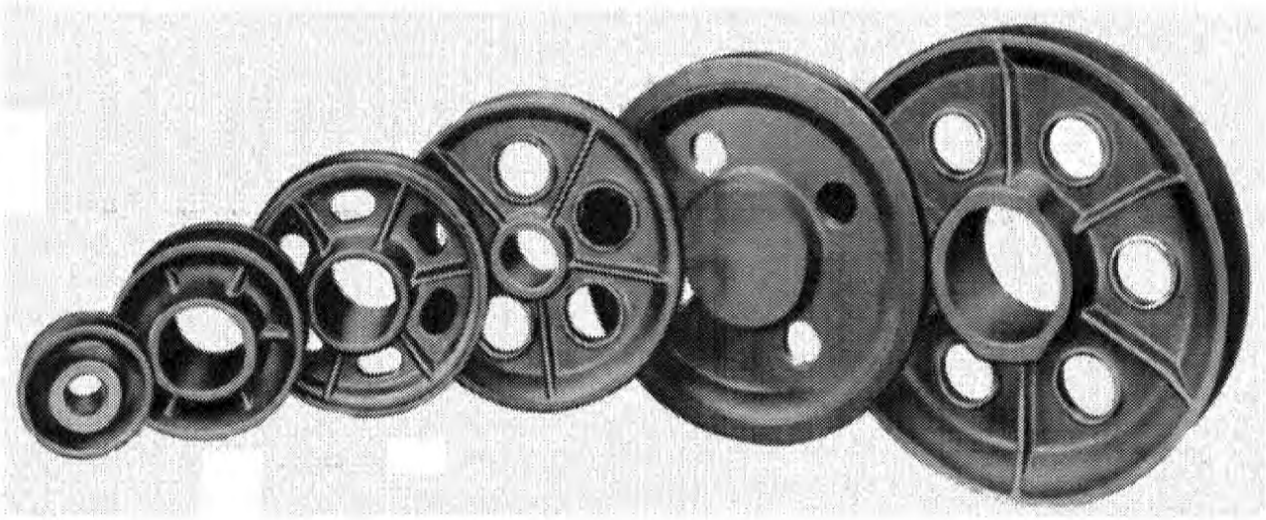

FEATURES: Skookum® manganese-steel sheaves get harder with use — are virtually non-wearing, normally increase service and life of wire rope. Skookum® cast-steel sheaves are of heavy-duty design. Most sheaves available with plain bore or a choice of four types of bearings: (1) Straight or tapered roller bearings, (2) Bronze bearing, (3) Self-lubricating type bearings, (4) Graphite bronze bearing.

SKOOKUM®

SHEAVES ● Manganese and Cast Steel

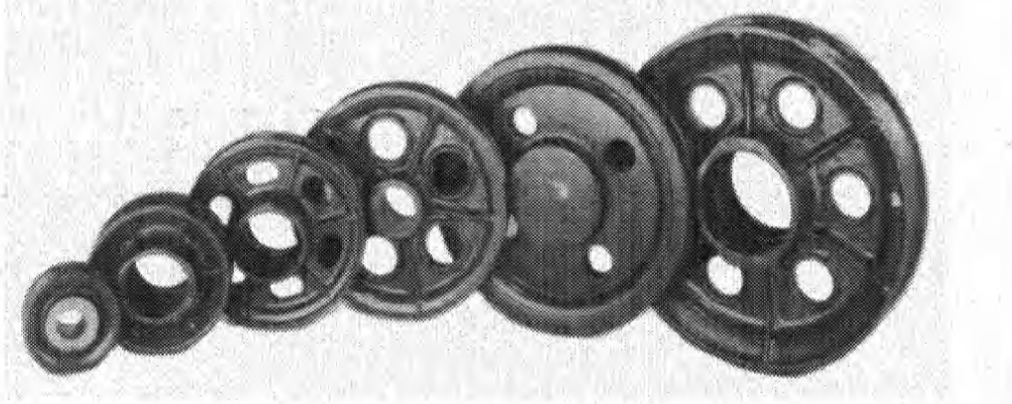

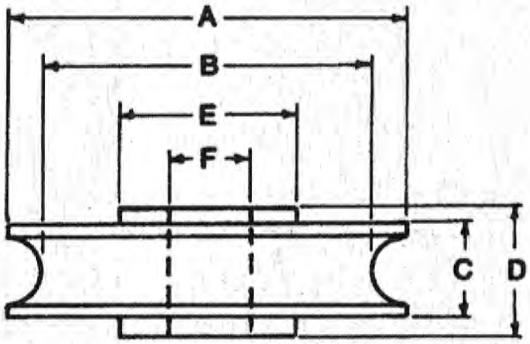

DIMENSIONS:

"A" Outside Diameter
"B" Tread Diameter
"C" Rim Width
"D" Hub Width
"E" Hub Diameter
"F" Bore Min. - Max.

BEFORE ORDERING ...
The following information is required to fill your sheave order promptly;

- ☐ Outside Diameter
- ☐ Tread Diameter
- ☐ Rim Width
- ☐ Hub Width
- ☐ Bore
- ☐ Bearing Type
  - PB - Plain Bore
  - RB - Roller Bearing (Straight or Tapered)
  - BB - Bronze Bearing
  - OBB - Oilite Bronze Bearing (Self-Lubricating)
  - GBB - Graphite Bronze Bearing
- ☐ Shaft Size
- ☐ Rope Size

★Specify when ordering "Special" Sheaves.

Facts to know about sheaves

Sheave design usually takes into account the following factors:

1. The bending stress induced in the wire rope.
2. The radial pressure of the wire rope on a sheave, which is the function of the rope tension and tread diameter of the sheave.
3. Safe bearing pressure of the material used in the sheave when the rope makes sufficient arc of contact with the sheave so that at least 1 rope lay, equal to about 6 diameters of rope, is in contact with sheave surface at all times.

If a sheave is forged or cast from a material softer than the wire rope, sheave life and a wire rope life will be shortened. The sheave will have a tendency to take on the impression of the wire rope, causing scoring and corrugation of the line groove.

Hard sheave surfaces offer the best bearing surface for wire rope, prolonging sheave life and rope life.

Skookum offers sheaves of cast manganese steel and cast steel only.

Skookum cast manganese steel sheaves offer the ultimate in sheave material. The material actually hardens to the use of wire rope and virtually will never wear out. This "work hardening" property of manganese not only gives greatly extended sheave life but increases the service time of wire rope.

Skookum heavy-duty cast-steel sheaves gives wire rope the proper hardened bearing surface required for good wire rope life, but does not have the "work hardening" property that is offered in cast manganese steel sheaves.

Consider the comparative advantages before buying an inexpensive sheave material. In the long run it can cost you more than you realize. Your wire rope deserves the best and the best, manganese steel, is offered by Skookum.

SKOOKUM®

SHEAVES ● Manganese and Cast Steel

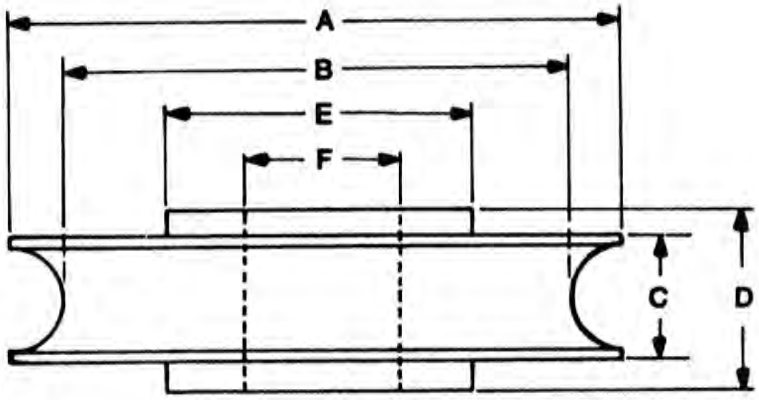

Sheave Number	"A" Outside Diam.	"B" Tread Diam.	"C" Rim Width	"D" Hub Width	"E" Hub Diam.	"F" Bore Min.-Max.	Rope Size	Approx. Weight	Sheave Material
A-4	4	2.875	1.375	1.500	2.125	1.750	3/8 to 1/2	2 lbs	Manganese
A-6	6	4.875	1.125	2.250	2.438	1.875	3/8 to 1/2	6 lbs	Manganese
T-6	6	5.000	1.375	3.250	3.250	2.750	1/2 to 9/16	6 lbs	Manganese
106R	6	4.875	1.750	1.938	2.938	2.438	1/2	4 1/2 lbs	Manganese
706	6	4.500	3.000	3.438	3.313	2.750	1/2	8 lbs	Manganese
6171	6	4.375	1.000	1.500	2.125	1 - 1.250	3/8 to 1/2	5 lbs	Cast Steel
F-7	7	5.500	2.750	2.875	3.250	2.750	1/2 to 9/16	8 lbs	Manganese
A-8	8	7.063	1.125	2.250	2.500	1.875	1/2 to 5/8	7 lbs	Manganese
T-8	8	7.000	1.375	3.125	3.250	2.750	5/8	7 lbs	Manganese
108R	8	6.750	1.750	1.750	2.938	2.438	5/8	9 lbs	Manganese
F-8	8	6.500	2.750	3.375	4.313	3.750	5/8 to 3/4	13 lbs	Manganese
808	8	6.250	3.000	3.500	3.313	2.750	5/8 to 3/4	10 lbs	Manganese
308	8	6.500	1.875	2.250	3.750	3.000	7/8 to 1	9 lbs	Manganese
80	8	5.750	4.000	4.000	5.000	4.250	1-1/8 to 1-1/4	20 lbs	Manganese
6172	8	6.500	1.250	1.875	3.250	1 - 2	1/2 to 5/8	11 lbs	Cast Steel
T-10S	10	9.000	1.750	3.125	3.250	2.750	5/8 to 3/4	12 lbs	Manganese
BP-100	10	8.000	3.000	2.875	2.375	1.875	5/8 to 3/4	9 lbs	Manganese
R-10	10	8.250	4.000	3.250	3.250	2.750	5/8 to 3/4	16 lbs	Manganese
A-10	10	8.750	1.250	2.250	2.500	1.875	5/8 to 3/4	9 lbs	Manganese
410	10	8.500	2.000	3.250	3.875	3.250	5/8 to 3/4	12 lbs	Manganese
1010	10	8.250	2.500	3.500	4.875	4.250	7/8 to 1	17 lbs	Manganese
2210	10	8.000	2.500	4.750	5.125	4.375	7/8 to 1	16 lbs	Manganese
510	10	7.875	2.500	3.750	3.500	2.875	7/8 to 1	20 lbs	Manganese
310	10	7.875	2.000	3.500	4.500	3.625	1-1/4	20 lbs	Manganese
104406	10	7.438	2.000	2.000	4.500	3.000	3/4	22 lbs	Cast Steel
109080	10	8.375	2.125	1.750	4.000	3.250	5/8 to 3/4	18 lbs	Cast Steel
6173	10	8.500	1.375	1.750	4.000	1 - 2.750	5/8 to 3/4	16 lbs	Cast Steel

SKOOKUM®

SHEAVES ● Manganese and Cast Steel

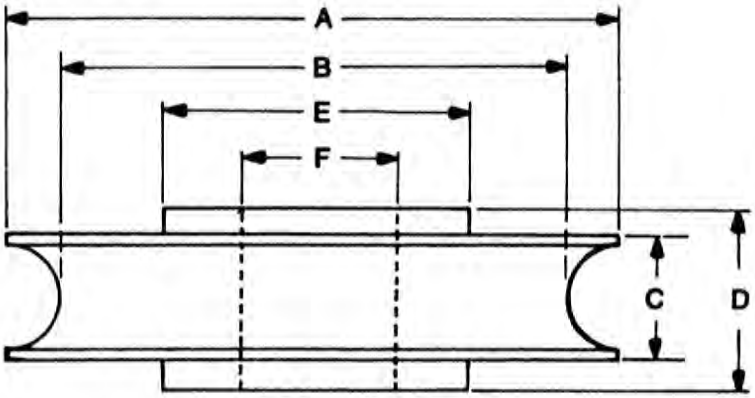

Sheave Number	"A" Outside Diam.	"B" Tread Diam.	"C" Rim Width	"D" Hub Width	"E" Hub Diam.	"F" Bore Min.-Max.	Rope Size	Approx. Weight	Sheave Material
A-12	12	10.875	1.375	3.125	3.250	2.500	3/4 to 7/8	15 lbs	Manganese
T-12	12	10.375	2.000	3.375	4.313	3.750	3/4 to 7/8	17 lbs	Manganese
412A	12	10.000	2.500	3.625	5.000	4.250	3/4 to 1	23 lbs	Manganese
512	12	10.000	2.500	3.750	3.500	2.875	7/8 to 1	26 lbs	Manganese
2212	12	10.000	2.500	5.250	5.125	4.375	1-1/8 to 1-1/4	28 lbs	Manganese
F-12	12	9.750	3.000	4.250	5.625	4.875	1-1/8 to 1-1/4	31 lbs	Manganese
2212TM	12	10.250	2.000	4.250	5.625	4.875	1-1/8 to 1-1/4	28 lbs	Manganese
312	12	10.000	2.125	3.500	4.500	3.625	1-1/4 to 1-3/8	26 lbs	Manganese
6174	12	10.250	1.500	2.250	4.250	1 to 3	5/8 to 3/4	29 lbs	Cast Steel
6175	14	12.250	1.500	2.375	5.000	1 to 3	5/8 to 3/4	36 lbs	Cast Steel
10450	14	12.125	1.500	2.125	5.125	3.000	7/8	23 lbs	Manganese
103220	14	12.750	1.750	3.500	5.250	2.500 to 4.250	3/4 to 7/8	26 lbs	Manganese
T-14	14	12.000	2.000	3.438	4.313	3.750	3/4 to 7/8	23 lbs	Manganese
414	14	12.000	2.500	3.500	4.875	4.250	3/4 to 1	27 lbs	Manganese
514	14	11.500	2.500	3.750	3.500	2.875	7/8 to 1	36 lbs	Manganese
2214	14	12.000	2.500	5.250	5.125	4.375	1-1/8 to 1-1/4	40 lbs	Manganese
F-14	14	11.250	2.875	5.625	6.000	4.875	1-3/8 to 1-1/2	52 lbs	Manganese
2214TM	14	11.250	2.875	5.625	6.000	4.875	1-1/4 to 1-1/2	52 lbs	Manganese
2014	14	11.250	2.750	4.750	5.750	4.750	1-1/2 to 1-3/4	52 lbs	Manganese
127920	15	13.125	1.750	2.000	4.500	3.000	7/8	38 lbs	Manganese
5375-2	16	14.000	2.500	3.000	5.000	2.625	3/4 to 1	33 lbs	Manganese
416	16	14.000	2.500	3.500	5.125	4.250	3/4 to 1	30 lbs	Manganese
2216	16	13.750	2.500	5.500	5.625	4.875	1-1/8 to 1-1/4	48 lbs	Manganese
16W	16	10.375	7.000	7.500	5.750	4.750	1 to 1-3/8	120 lbs	Manganese
F-16	16	12.000	3.750	4.000	8.500	7.000	1-1/2 to 1-3/4	105 lbs	Manganese
2016	16	12.375	3.000	4.500	6.000	4.750	1-1/2 to 1-3/4	66 lbs	Manganese
2616	16	12.750	3.500	7.000	9.000	7.500	1-1/2 to 1-3/4	89 lbs	Manganese
6176	16	14.125	1.750	2.750	7.000	2.500 to 5	7/8 to 1	63 lbs	Cast Steel

SKOOKUM®

SHEAVES ● Manganese and Cast Steel

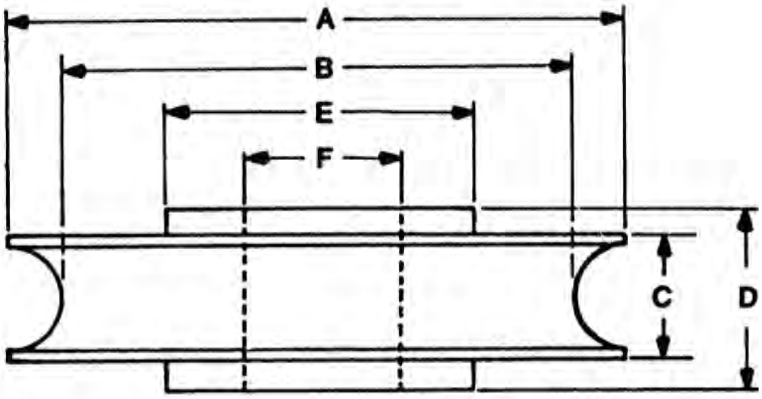

Sheave Number	"A" Outside Diam.	"B" Tread Diam.	"C" Rim Width	"D" Hub Width	"E" Hub Diam.	"F" Bore Min.-Max.	Rope Size	Approx. Weight	Sheave Material
6177	18	15 1/2	2	2 3/4	7 1/2	2 1/2 - 6	1 - 1 1/8	71 lbs	Cast Steel
418	18	16	2 1/2	3 1/2	5 1/8	4 1/4	3/4 - 1	44 lbs	Manganese
180	18	14 3/4	4	4 7/8	5 3/4	4 7/8	1 1/8 - 1 3/8	66 lbs	Manganese
2218	18	15 3/4	2 1/2	5 1/2	5 5/8	4 7/8	1 1/8 - 1 1/4	65 lbs	Manganese
2218TM	18	15 1/2	3	4 3/16	5 3/4	4 7/8	1 1/4 - 1 1/2	65 lbs	Manganese
2000	20	17 1/2	31/2	6	7 1/2	6 3/8	1 1/8 - 1 1/4	88 lbs	Manganese
2220	20	17 3/8	2 1/2	4	5 3/4	4 3/4 - 4 7/8	1 - 1 1/8	57 lbs	Manganese
11055	20	17	2 3/4	3 1/4	7 1/4	4 1/2 - 5 3/4	1 1/8 - 1 1/4	95 lbs	Cast Steel
6178	20	17 1/4	2	2 5/8	7 3/4	2 3/4 - 6 1/2	1 - 1 1/4	94 lbs	Cast Steel
11096	21	19 1/4	2 1/2	3 3/4	7	5 1/2	3/4 - 1	105 lbs	Cast Steel
6179	22	19 1/4	2 1/8	3	7 3/4	2 3/4 - 6 1/2	1 - 1 1/8	118 lbs	Cast Steel
2222	22	19 3/4	3	4	5 3/4	4 3/4 - 4 7/8	1 - 1 1/4	75 lbs	Manganese
6180	24	21 1/4	2 1/4	3	7 1/2	3 1/4 - 6 1/2	1 - 1 1/4	130 lbs	Cast Steel
6124	24	20 1/2	3 1/4	4 1/8	7 1/2	6 1/2	1 - 1 1/4	140 lbs	Cast Steel
24W	24	18 1/2	7	7 1/4	5 3/4	4 3/4	1 1/4 - 1 3/8	220 lbs	Manganese
2400	24	20 1/2	4 1/2	6 3/4	7 1/2	6 7/8	1 - 1 1/8	105 lbs	Manganese
10382	24	20	3 1/2	9 3/8 - 7	10 7/8	8 5/8	1 1/2 - 1 3/4	---	Cast Steel
2624	24	20 1/2	3 1/2	7 1/4	8 1/2	7	1 1/2 - 2	210 lbs	Cast Steel
260000	26	23 1/2	2 3/4	3 7/8	10 1/2	4 - 8 1/2	1 1/4	156 lbs	Manganese
3000	30	26	5	8	8 3/4	7 1/4 - 7 1/2	1 1/4 - 1 3/8	267 lbs	Manganese
3030	30	26 1/4	5	8	7 1/2	6 3/8	1 1/4 - 1 3/8	235 lbs	Manganese
10327	30	26 1/4	3 1/4	4 1/4	8 3/8	6 1/2	1 1/4 - 1 1/2	170 lbs	Manganese
10337	30	23 1/4	3 1/2	3 3/4	5 3/4	3 1/2	1 1/4 - 1 3/8	252 lbs	Manganese
6130	30	26 7/8	2 1/2	3 3/4	7	4 7/8	3 /4 - 1 1/8	175 lbs	Manganese
30W	30	24 1/2	7	7 1/4	9	7 1/4 - 7 1/2	1 3/8 - 1 1/2	350 lbs	Manganese
11060	32 5/8	29 1/2	2 1/2	3 3/4	10	7 - 8 1/2	1 1/4	310 lbs	Manganese
3600	36	30	6	7 3/8	9 3/8	7 1/4 - 7 1/2	1 3/8 - 1 5/8	460 lbs	Manganese
3624	36	30	5 1/2	6 1/2	12	6 1/2	2 1/2 - 3 1/2	966	Manganese
102240	36	33	3	3 1/4	---	6 1/2	1 1/4	---	Cast Steel
10381	42	38 1/4	3 1/2	4	10 3/4	9	1 3/8 - 1 1/2	345 lbs	Manganese
422400	42	35	5 1/4	6 1/4	12	6 1/2 - 9	2 1/2 - 3 1/2	1200 lbs	Manganese
11061	47	43 3/4	3	5 1/4	10	6 3/4 - 8 1/2	1 1/8 - 1 1/4	650 lbs	Cast Steel
614800	48	44 1/8	4 3/8	6 1/4	12 1/2	9	1 1/2 - 2	900 lbs	Manganese

SKOOKUM®

SINCE 1890

GOLD STANDARD FORGINGS

RS/FG

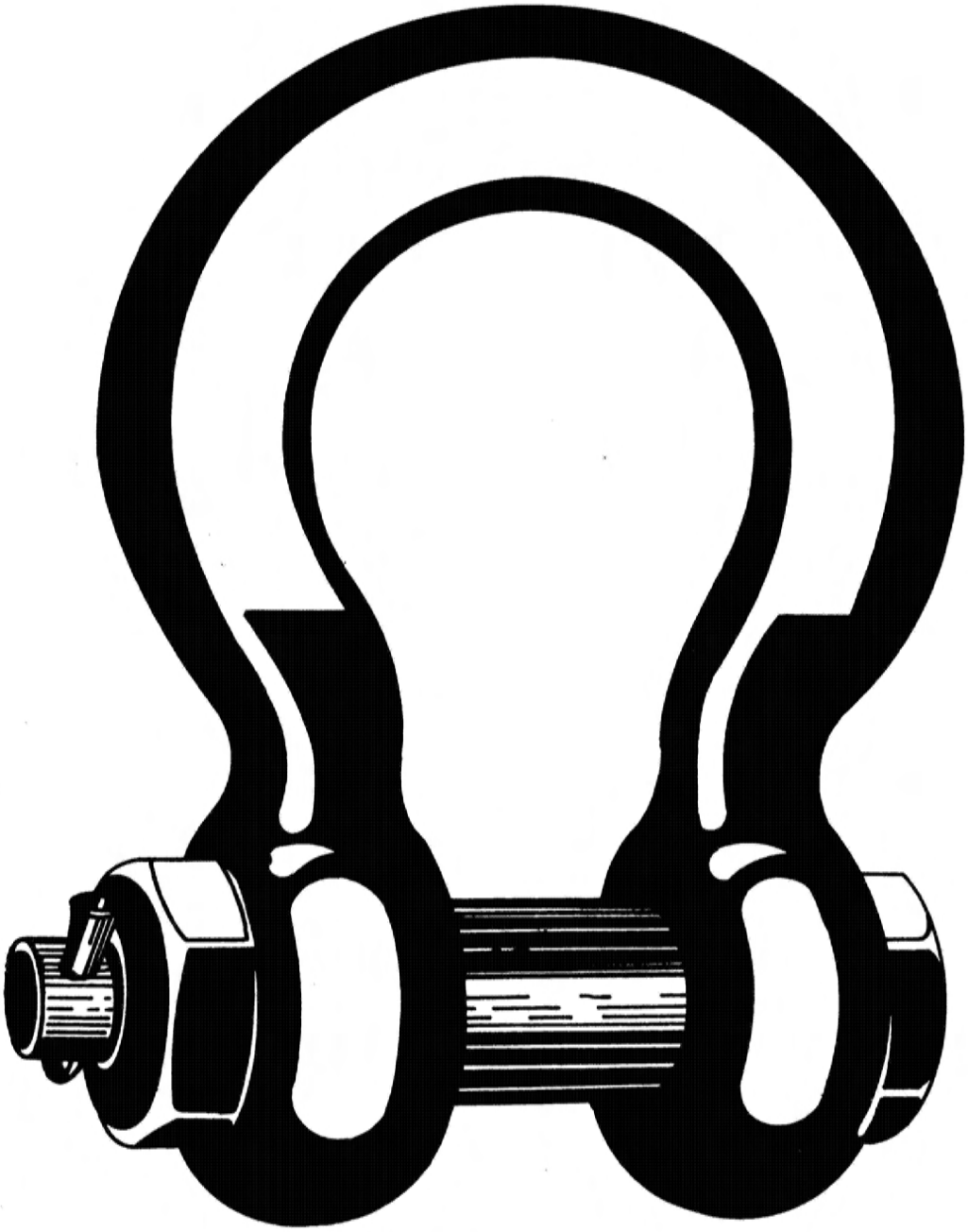

Since 1890

SKOOKUM®
Gold Standard Forgings

Important Product Information

- **Made from nickel, chrome moly alloy steel for maximum strength, hardness, stability and uniformity.**
- **Quenched and tempered.**
- **Size and safe working load permanently imprinted on each shackle.**
- **Available with enamel, zinc plate or galvanized finish.**
- **Proof loading available on request.**
- **Specifications subject to change without notice.**

Before you buy, some facts:
This catalog of Skookum shows our stock line of products and is provided to help you with your ordering. Before you begin to use it, though, there are a few things we'd like you to know about how we like to do business... and how we prefer you do business with us.

Pay attention to working load limit ratings
All ratings shown in Skookum literature are based upon item being new or in "as new" condition. Catalog ratings are considered to be the greatest load that should be applied to the item; therefore, any shock loading must be considered when selecting the item for use in a system.

Catalog ratings are based upon usual environmental conditions and consideration must be given to item selection when unusual conditions are to be encountered. All ratings given in tons refer to short tons of 2,000 lbs.

The products shown are in general, items, intended to be used in a tension or pull manner, so, caution must be used so that the product is not subjected to a side loading that will cause an additional and unintended loading.

All hook latches are intended to retain loose slings or devices under slack conditions. They are not intended to be antifouling devices, so, caution should be used to prevent the latch from supporting any of the load. Periodic inspection of latches must be made to insure proper operating condition.

Welding of or to load supporting parts or products can be a source of a problem. It is necessary to have knowledge of materials, heat treatment and welding procedures before welding of any item is to be considered. We suggest the plant be consulted for information.

Line sizes are intended for regular wire rope, not swaged wire rope.

Inspect and inspect again
The products shown are subject to wear, misuse, overloading, corrosion, deformation, intentional alteration and other usage factors which may necessitate a reduction in the product's Working Load Limit rating or a reduction in its Design Factor.

Therefore, it is recommended that all products be regularly inspected to determine their condition as a basis for deciding if the product may continue to be used at the catalog assigned WLL, a reduced WLL, a reduced design factor, or removed from service. When items are questionable, they may be returned to the plant for inspection at a reasonable charge.

It is necessary to clean and inspect all items on a regular basis and keep records of the inspection. Things to look for during the inspection are:

- ☐ Marks, nicks, gouges and cracks
- ☐ Wear, especially excessive wear at bearing points and threads
- ☐ Twists or bends
- ☐ Unauthorized welding, cutting, or general heat application
- ☐ Opening or stretching of hooks
- ☐ Loose or worn retaining latches on hooks
- ☐ Mushroomed striking faces on hammers and splitting items

These conditions must be resolved (tested, repaired, or replaced) *before* the items are put back into service.

Know the types of loads
Knowing the correct terminology of the load ratings will help you (and us) specify the correct item for your job. The following load definitions are the ones we use at Skookum:

Working Load Limit: The maximum recommended load that should be extended on the item. Also known as "WLL", "Working Load," "Working Load Limit," and the "Resultant Safe Working Load." All safe working loads, unless noted otherwise, are for in-line pull with respect to the centerline of the item.

Proof Load: The average load to which an item may be subjected before visual deformation occurs or a load that is applied in the performance of a proof test.

Proof Test: A term designating a tensile test applied to the item for the sole purpose of detecting injurious defects in the material or manufacture.

Ultimate Load: The average load at which the item being tested fails or no longer supports the load.

Shock Load: A resulting load from the rapid change of movement, such as impacting or jerking, of a static load. A Shock Load is generally significantly greater than the static load.

Design Factor: An industry term denoting theoretical reserve capability. Usually computed by dividing the catalog stated ultimate load by the catalog stated working load limit and generally expressed as a ratio, for example 5 to 1.

Note: For special conditions or warnings see the applicable Technical Bulletin(s).

SKOOKUM®
Gold Standard®
Anchor Shackles

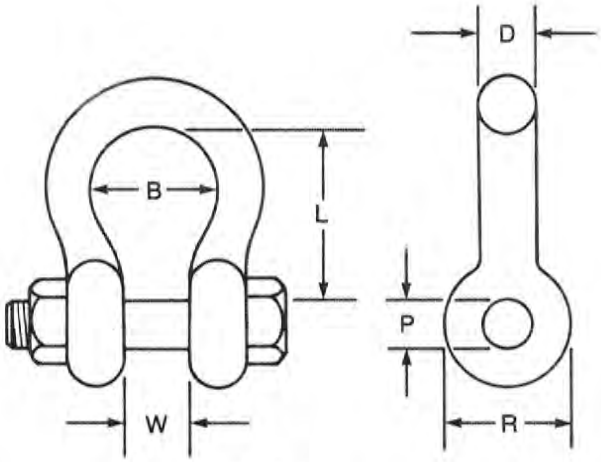

No. 320
Safety Pin Shackle
Available ½"-4½"

No. 263
Screwpin Shackle Eyed Pin
Available ½"-3"

No. 264
Screwpin Shackle Hex Head Pin or Marine Hex Head
Available ½"-3"

No. 330
Towing Shackle Double Nut and Locking Bolts
Available ½"-4"

Anchor Shackles

Size	WLL[1] (Tons)	Nominal D	W	Tolerance ±	L	Tolerance ±	B	R	P	Weight[2] (lbs)
1/2	5	0.625	0.406	± .063	1.875	± .125	1.281	1.438	0.625	1
5/8	7	0.750	1.063	± .063	2.500	± .125	1.750	1.625	0.750	2
3/4	9	0.875	1.250	± .063	2.875	± .250	2.000	1.844	0.875	3
7/8	12	1.000	1.438	± .063	3.313	± .250	2.281	2.125	1.000	4
1	16	1.125	1.688	± .063	3.750	± .250	2.688	2.250	1.125	5.5
1-1/8	18	1.125	1.813	± .063	4.250	± .250	2.938	2.625	1.250	8
1-1/4	21	1.250	2.031	± .063	4.625	± .250	3.250	3.000	1.375	11
1-3/8	26	1.375	2.250	± .125	5.250	± .250	3.625	3.250	1.500	14
1-1/2	31	1.500	2.375	± .125	5.750	± .250	3.875	3.438	1.625	18
1-5/8	35	1.625	2.625	± .125	6.250	± .250	4.625	4.000	1.750	23
1-3/4	41	1.750	2.875	± .125	7.000	± .250	5.000	4.250	2.000	30
2	52	2.000	3.250	± .125	7.750	± .500	5.750	5.000	2.250	42
2-1/4	67	2.250	3.875	± .125	9.250	± .500	6.500	5.500	2.500	57
2-1/2	82	2.500	4.125	± .125	10.500	± .500	7.250	5.875	2.750	85
2-3/4	104	2.750	4.500	± .125	11.500	± .750	7.500	6.250	3.000	100
3	117	3.000	5.000	± .125	13.000	± .750	7.875	6.500	3.250	136
3-1/2	150	3.500	5.750	± .250	15.000	± .750	9.500	8.000	3.750	256
4	175	4.000	6.500	± .250	17.000	± .750	11.000	9.000	4.250	364
4-1/2	210	4.500	7.250	± .250	19.000	± 1.125	12.500	9.750	5.000	500

[1]Design factor is 5 to 1

[2]Weights vary slightly with style of shackle pin used.

SKOOKUM®
Gold Standard®
Chain Shackles

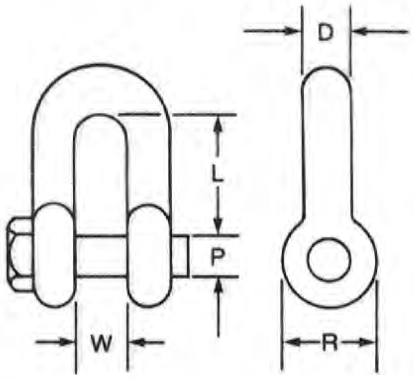

No. 321
Safety Pin Shackle
Available 1″-4½″

No. 270
Screwpin Shackle Eyed Pin
Available 1″-2″

No. 271
Screwpin Shackle Hex Head Pin
Available 1″-2″

No. 325
Towing Shackle Double Nut and Locking Bolts
Available 1¾″-4″

Chain Shackles

Size	WLL[1] (Tons)	D	W	Tolerance ±	L	Tolerance ±	R	P	Weight[2] (lbs)
1	16	1.000	1.688	- .063 + .125	3.250	± .250	2.250	1.125	5.5
1-1/8	17.5	1.125	1.813	- .063 + .125	3.563	± .250	2.625	1.250	6.6
1-1/4	21	1.250	2.031	± .063	3.938	± .250	2.875	1.375	8.9
1-3/8	26	1.375	2.250	± .125	4.438	± .250	3.250	1.500	12
1-1/2	30	1.500	2.375	± .125	4.875	± .250	3.438	1.625	16.2
1-5/8	35	1.625	2.625	± .125	5.250	± .250	4.000	1.750	21
1-3/4	40	1.750	2.875	± .125	5.750	± .250	4.500	2.000	25
2	52	2.000	3.250	± .125	6.750	± .500	5.125	2.250	36
2-1/4	67	2.250	3.875	± .125	7.125	± .500	5.250	2.500	60
2-1/2	82	2.500	4.125	± .125	8.000	± .500	6.250	2.750	74
2-3/4	104	2.750	4.500	± .125	8.250	± .750	6.250	3.000	90
3	117	3.000	5.125	± .125	9.000	± .750	6.500	3.250	110
3-1/2	150	3.500	5.750	± .250	10.500	± .750	8.000	3.750	200
4	175	4.000	6.500	± .250	12.000	± .750	9.000	4.250	310

[1]Design factor is 5 to 1.

[2]Weights vary slightly with style of shackle pin used.

Skookum All Alloy No. 59A Sheet Pile Shackles

The No. 59A shackles were specifically designed for pulling sheet piling. They are equipped with a easy opening pin which will not detach and become lost. No tools are required.
Max opening with pin in open (unlocked) position.
Design factor is 5 to1.
Replacement pins must replaced or repaired by Skookum in Hubbard, OR.

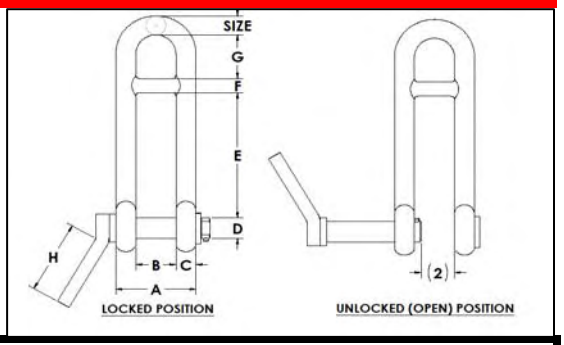

SIZE	OPENING 2	A	B	C	D	E	F	G	H	WEIGHT	W.L.L TONS
1	1.75	4.25	2.25	1.00	1.12	7 ± .25	0.62	2.37	5.00	10	8
1 1/8	1.87	4.50	2.50	1.00	1.25	8 ± .50	0.75	3.00	5.00	13	10
1 1/4	2.00	5.25	2.75	1.25	1.37	9 ± .50	0.87	3.00	5.00	18	12
1 1/2	2.12	6.25	3.00	1.50	1.62	10 ± .50	1.12	3.50	6.00	29	17
1 3/4	2.50	7.00	3.50	1.75	2.00	11 ± .50	1.25	4.00	7.00	45	24
2	3.00	8.00	4.00	2.00	2.25	12 ± .75	1.37	4.50	8.00	63	30

Made in the U.S.A.

New Skookum No.159A Sheet Pile Shackle Ground release

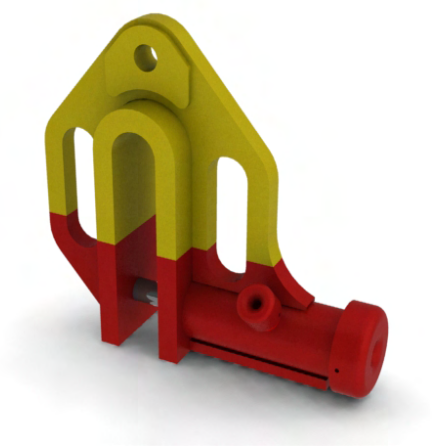

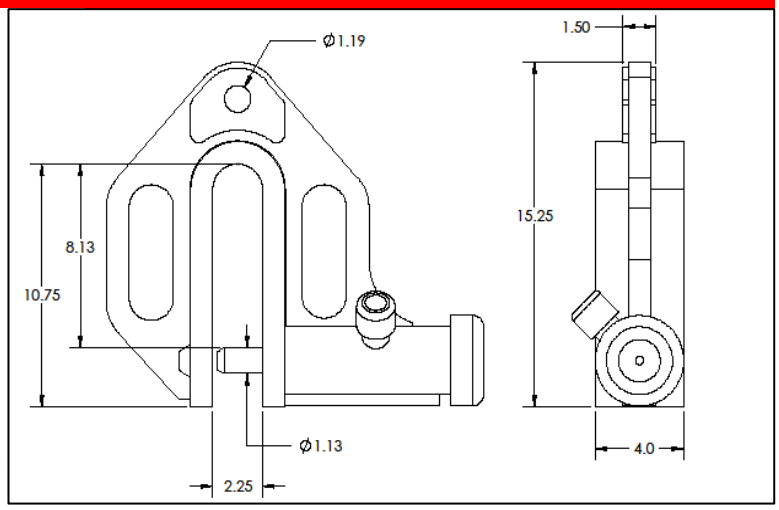

12 ton working load limit @ 4:1 design factor.
Skookum Part Number 615912
Equipped with Skookum 1" #320 bolt type anchor shackle
Built with high strength steel.
12" lg. stainless steel release cable with thimble. (supplied but not shown)
Made in the U.S.A.

ULVEN All Alloy Hooks

Arch (tractor) Hooks and Shackles

(Not intended for overhead use)

No. 156
Elongated Eye Arrow Point

No. 113
Cross Eye T Point

No. 114
Regular Eye Plain Point

No. 114
Regular Eye Arrow Point

No. 113
Cross Eye Arrow Point

No. 114
Regular Eye T Point

Recommended Arch Hook Size	Recommended Drum Line Size	Approx. Arch Hook Weight	Recommended #112 Arch Hook Shackle	Approx. Arch Hook and Shackle Weight
1¼"	½"	4 lbs.	¾"	6¼ lbs.
1½"	¾"	6 lbs.	1"	10 lbs.
1¾"	⅞"	9 lbs.	1⅛"	15 lbs.
2"	1"	16 lbs.	1¼"	23 lbs.
2¼"	1⅛"	19 lbs.	1⅜"	29 lbs.
2½"	1¼"	26 lbs.	1½"	39 lbs.

All Alloy No. 31 Railroad Car Hook

Designed for railroad salvage, track clearing and yard maintenance. Rounded eye allows wire rope to be spliced directly to hook.

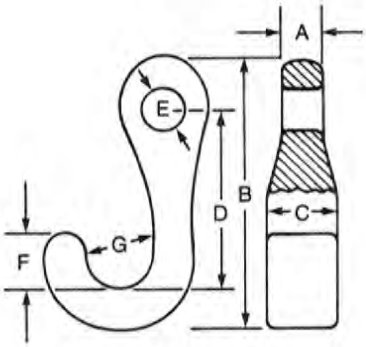

WLL[1]	A	B	C	D	E	F	G	Line Size	Weight
25 Ton	1½"	12¼"	3"	7¾"	1 13/16"	2 9/16"	3⅛"	1½"	23½ lbs.
20 Ton	1 3/8"	12"	3"	7 3/4"	1 11/16"	2 9/16"	3 1/8"	1 3/8"	20 lbs.

[1]Design factor is 5 to 1

Oregon Strawline Hook

Forged and heat treated alloy steel.
Sizes: 1/2", 7/16", 3/8", 5/16", 1/4"

Cast Steel Weld Links

1" — 1¾"x5"
1⅛" — 2"x5"
1¼" — 2"x6"
1⅜" — 2⅛"x6"
1½" — 2¼"x6"

Safety Strap Ferrules

Sizes: 1¾" and 2"

Climbers Belts

38", 40", 42" & 44" belts in stock, additional sizes on request. Replacement "D" rings and buckles also available.

"Buckingham" or "Klein" Climbing Spurs

Adjustable style, with replacement screws available.

Leg & Ankle Straps

26" leather strap made of the finest leather for wear and flexibility.

Climbers Pads

Cast aluminum alloy with rubber pads. Rubber attached with contact cement, eliminating rivets which tear pads and irritate legs. Additional rubber pads also stocked.

Right or Left Pad Only

With rubber.

Wire Rope Tongs

Time saving tool for babbitting ferrules. 2 sizes:
Small—3/4", 7/8", 1" wire rope
Large—1⅛", 1¼" wire rope

Snaps

Round Eye Style.
Saddle Style not recommended as a climbing safety snap.

Safety Rope

7/8" diameter, 4 strand with flexible wire core.
Order by foot, 600' maximum per spool.

Oregon Pattern Splitting Wedge

Heat treated high-carbon steel, available in 6 and 8 lb. sizes.

Axe Eye Splitting Maul

Heat treated high-carbon steel, complete with handle, available in 6 and 8 lb. sizes.

3/8"-7/16" Strawline Hook

Drop forged, heat treated alloy steel.
One hook fits both line sizes.

Clark Swivels

Two sizes, cast alloy steel—heat treated.
C7
C9

Morse Starrett Cable Cutters

Impact and hydraulic models in stock. Blades and dies made of finest quality tool steel. Replacement parts also stocked.
Impact models: #1 up to 5/8"; #1a up to 1 1/16"; #2 up to 1 1/2"
Hydraulic models: "W" up to 3/4"; "P" up to 1 1/8"; "C" up to 1 3/4"

Drew Marlin Spikes

Available in 6," 8," 10," 12," 14," 16," 18," 20," 24," 30," 36," & 42" sizes.

Weldless Rings

Carbon steel heat treated.
1/2"x2 1/2" 5/8"x2 3/4" 3/4"x3" 7/8"x3 1/4" 1"x4"

Utility Tongs

Good hex legged tongs where price is a factor, ring attached with cold shuts.
3/4," 7/8," 1," 1 1/8," 1 1/4"

Double Ender Hooks

Cast alloy steel available with or without safety locks.
Junior — 7/8" & 1 3/4" line
Bantam — 5/8" & 3/4" line
Standard — 1" & 1 1/2"

Pickaroon

Dropped forged carbon steel with welded edge, wood handle.

Signal Relay Box

12V and 24V DC. Complete with relay and resistor.
Replacement tubes and resistors stocked.

Resistors

12V and 24V DC. Replacement for Signal Relay Box.

Tube

12V and 24V DC. Replacement for Signal Relay Box.

Air Signal Sets

12V and 24V DC.

Air Control Valve

12V and 24V DC.

Air Whistles

Available in steel or brass with 3" or 3½" diaphrams.

Signal Wire

In 250 foot spools.

Signal Grips

With hardwood handles.

ULVEN

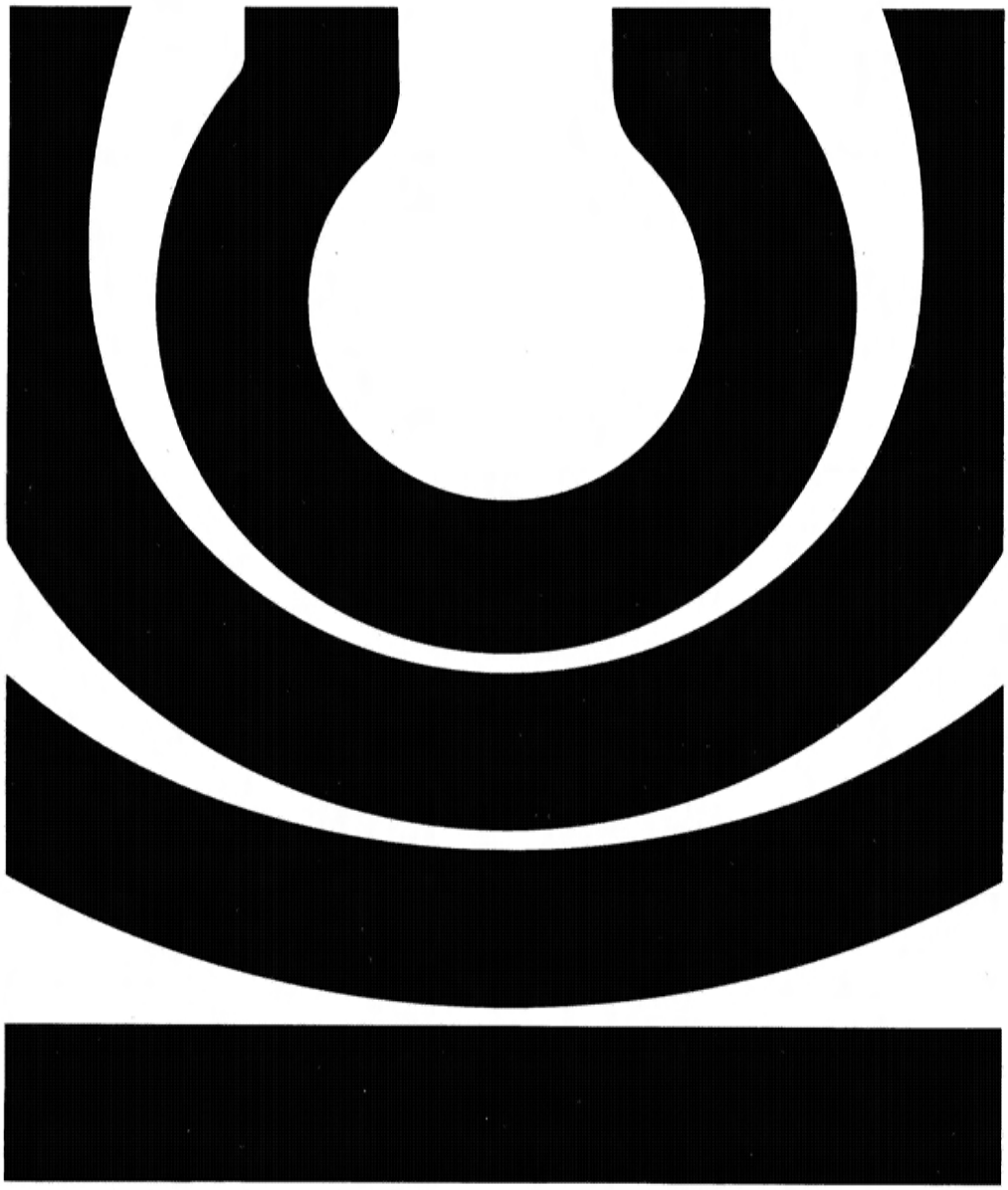

MADE IN THE USA

ULVEN

Before you buy, some facts:

This catalog of Ulven Forging shows our stock line of products and is provided to help you with your ordering. Before you begin to use it, though, there are a few things we'd like you to know about how we like to do business. . .and how we prefer you do business with us.

Pay attention to safe working load ratings

All ratings shown in Ulven literature are based upon the item being new or in "as new" condition. Catalog ratings are considered to be the greatest load that should be applied to the item; therefore, any shock loading must be considered when selecting the item for use in a system.

Catalog ratings are based upon usual environmental conditions and consideration must be given to item selection when unusual conditions are to be encountered. All ratings given in tons refer to short tons of 2,000 lbs.

The products shown are in general, items intended to be used in a tension or pull manner, so, caution must be used so that the product is not subjected to a side loading that will cause an additional and unintended loading.

All hook latches are intended to retain loose slings or devices under slack conditions. They are not intended to be anti-fouling devices, so, caution should be used to prevent the latch from supporting any of the load. Periodic inspection of latches must be made to insure proper operating condition.

Welding of or to load supporting parts or products can be a source of a problem. It is necessary to have knowledge of materials, heat treatment and welding procedures before welding of any item is to be considered. We suggest the plant be consulted for information.

Line sizes are intended for regular wire rope, not swaged wire rope.

Inspect and inspect again

The products shown are subject to wear, misuse, overloading, corrosion, deformation, intentional alteration and other usage factors which may necessitate a reduction in the product's Working Load Limit rating or a reduction in its Design Factor. Therefore, it is recommended that all products be regularly inspected to determine their condition as a basis for deciding if the product may continue to be used at the catalog assigned WLL, a reduced WLL, a reduced safety factor, or removed from service. When items are questionable, they may be returned to the plant for inspection at a reasonable charge.

It is necessary to clean and inspect all items on a regular basis and keep records of the inspection. Things to look for during the inspection are:

- ☐ Marks, nicks, gouges and cracks
- ☐ Wear, especially excessive wear at bearing points and threads
- ☐ Twists or bends
- ☐ Unauthorized welding, cutting, or general heat application
- ☐ Opening or stretching of hooks
- ☐ Loose or worn retaining latches on hooks
- ☐ Mushroomed striking faces on hammers and splitting items

These conditions must be resolved (tested, repaired, or replaced) *before* the items are put back into service.

Know the types of loads

Knowing the correct terminology of the load ratings will help you (and us) specify the correct item for your job. The following load definitions are the ones we use at Ulven Forging:

Working Load Limit: The maximum recommended load that should be exerted on the item. Also known as "WLL," 'Working Load," "Working Load Limit," and the "Resultant Working Load Limit." All safe working loads, unless noted otherwise, are for in-line pull with respect to the centerline of the item.

Proof Load: The average load to which an item may be subjected before visual deformation occurs or a load that is applied in the performance of a proof test.

Proof Test: A term designating a tensile test applied to the item for the sole purpose of detecting injurious defects in the material or manufacture.

Ultimate Load: The average load at which the item being tested fails or no longer supports the load.

Shock Load: A resulting load from the rapid change of movement, such as impacting or jerking, of a static load. A Shock Load is generally significantly greater than the static load.

Design Factor: An industry term denoting *theoretical* reserve capability. Usually computed by dividing the catalog stated ultimate load by the catalog stated working load limit and generally expressed as a ratio, for example 5 to 1.

101 Screw Pin Shackle

With 1/8″ oversize screw pin; most commonly used shackle for general rigging.

S	P	J	B	R	WLL (Tons)	Weight in lbs.
1/2	5/8	3/4	1 1/4	2 1/8	4	1
5/8	3/4	7/8	1 3/8	2 1/4	6	1.5
3/4	7/8	1	1 5/8	2 3/4	9	2.5
7/8	1	1 1/8	1 3/4	3	12	3.5
1	1 1/8	1 1/4	2	3 1/4	16	4.5
1 1/8	1 1/4	1 3/8	2 1/8	3 1/2	18	6
1 1/4	1 3/8	1 1/2	2 1/4	4	21	8
1 3/8	1 1/2	1 5/8	2 5/8	4 1/2	26	11
1 1/2	1 5/8	1 3/4	2 7/8	5	31	15
1 5/8	1 3/4	1 7/8	3 1/8	5 1/4	35	19
1 3/4	2	2 1/4	3 1/4	6	41	21
2	2 1/4	2 1/2	3 5/8	6 1/2	52	30
2 1/4 thru 3″ Available on request						

102 Bolt Type Pin Shackle

Same bale configuration as above No. 101; pin is complete with nut and molly hole. This shackle is frequently referred to as a **Bolt Type** pin shackle.

S	P	J	B	R	WLL (Tons)	Weight in lbs.
1/2	5/8	3/4	1 1/4	2 1/8	4	1.5
5/8	3/4	7/8	1 3/8	2 1/4	6	2
3/4	7/8	1	1 5/8	2 3/4	9	2.5
7/8	1	1 1/8	1 3/4	3	12	4.5
1	1 1/8	1 1/4	2	3 1/4	16	5
1 1/8	1 1/4	1 3/8	2 1/8	3 1/2	18	7
1 1/4	1 3/8	1 1/2	2 1/4	4	21	9
1 3/8	1 1/2	1 5/8	2 5/8	4 1/2	26	12
1 1/2	1 5/8	1 3/4	2 7/8	5	31	16
1 5/8	1 3/4	1 7/8	3 1/8	5 1/4	35	20
1 3/4	2	2 1/4	3 1/4	6	41	23
2	2 1/4	2 1/2	3 5/8	6 1/2	52	35
2 1/4 thru 3″ Available on request						

103 Screw Pin Bell Pattern

Shackle bale is similar in size to our hanging shackle.

S	P	J	B	R	WLL (Tons)	Weight in lbs.
3/4	7/8	1	2 3/8	3 1/2	9	3
7/8	1	1 1/8	2 5/8	4	12	4
1	1 1/8	1 1/4	3	5	16	7
1 1/8	1 1/4	1 3/8	3 1/4	5 1/2	18	9.5
1 1/4	1 3/8	1 1/2	3 3/4	6	21	11
1 3/8	1 1/2	1 5/8	4	6 1/2	26	13
1 1/2	1 5/8	1 3/4	4 1/4	7	31	18
1 3/4	2	2 1/4	5	8	41	27
2	2 1/4	2 1/2	5 1/2	8 1/2	52	39

104 Top Tong Shackle

Same as No. 103 except pin has a molly hole.

S	P	J	B	R	WLL (Tons)	Weight in lbs.
3/4	7/8	1	2 3/8	3 1/2	9	3
7/8	1	1 1/8	2 5/8	4	12	4
1	1 1/8	1 1/4	3	5	16	7
1 1/8	1 1/4	1 3/8	3 1/4	5 1/2	18	9.5
1 1/4	1 3/8	1 1/2	3 3/4	6	21	10
1 3/8	1 1/2	1 5/8	4	6 1/2	26	13
1 1/2	1 5/8	1 3/4	4 1/4	7	31	18
1 3/4	2	2 1/4	5	8	41	27
2	2 1/4	2 1/2	5 1/2	8 1/2	52	39

105 Straight Side Screw Pin Shackle

S	P	J	R	WLL (Tons)	Weight in lbs.
1/2	5/8	3/4	2 1/4	4	1
5/8	3/4	7/8	2 1/2	6	1.5
3/4	7/8	1	2 3/4	9	2.5
7/8	1	1 1/8	3	12	3.5
1	1 1/8	1 1/4	3 1/2	16	4.5
1 1/8	1 1/4	1 3/8	3 3/4	18	6
1 1/4	1 3/8	1 1/2	4 1/4	21	8
1 3/8	1 1/2	1 5/8	5	26	10
1 1/2	1 5/8	1 3/4	5 1/2	31	15
1 3/4	2	2 1/4	6	41	21
2	2 1/4	2 1/2	6 1/2	52	31

106 Straight Side Bolt Type Pin Shackle

With nut and molly hole.

S	P	J	R	WLL (Tons)	Weight in lbs.
1/2	5/8	3/4	2 1/4	4	1.5
5/8	3/4	7/8	2 1/2	6	2
3/3	7/8	1	2 3/4	9	2.5
7/8	1	1 1/8	3	12	3.5
1	1 1/8	1 1/4	3 1/2	16	4.5
1 1/8	1 1/4	1 3/8	3 3/4	18	6
1 1/4	1 3/8	1 1/2	4 1/4	21	8
1 3/8	1 1/2	1 5/8	5	26	10
1 1/2	1 5/8	1 3/4	5 1/2	31	15
1 3/4	2	2 1/4	6	41	21
2	2 1/4	2 1/2	6 1/2	52	30

2 1/4 thru 3" Available on request

107 Straight Side Loose Pin Shackle

With cotter pin; frequently referred to as guyline shackle.

S	P	J	R	WLL (Tons)	Weight in lbs.
3/4	7/8	1	2 3/4	9	2.5
7/8	1	1 1/8	3	12	3.5
1	1 1/8	1 1/4	3 1/2	16	4.5
1 1/8	1 1/4	1 3/8	3 3/4	18	6
1 1/4	1 3/8	1 1/2	4 1/4	21	8
1 3/8	1 1/2	1 5/8	5	26	10
1 1/2	1 5/8	1 3/4	5 1/2	31	15

1 3/4", 2 1/4", 2 1/2" Also available.

108 Hanging Shackle

Bale has a deep spread with a wide bell. Pin is secured with a jam nut and molly hole.

S	P	J	B	R	WLL (Tons)	Weight in lbs.
5/8	3/4	7/8	2	3	6	3.5
3/4	7/8	1	2 3/8	3 1/2	9	4
7/8	1	1 1/8	2 5/8	4	12	4.5
1	1 1/8	1 1/4	3	5	16	6
1 1/8	1 1/4	1 3/8	3 1/4	5 1/2	18	7.5
1 1/4	1 3/8	1 1/2	3 3/4	6	21	10
1 3/8	1 1/2	1 5/8	4	6 1/2	26	15
1 1/2	1 5/8	1 3/4	4 1/4	7	31	17
1 5/8	1 3/4	1 7/8	4 5/8	7 1/2	35	21
1 3/4	2	2 1/4	5	8	41	28
2	2 1/4	2 1/2	5 1/2	8 1/2	52	37

2 1/4" thru 3" Available on request.

109 Knock Out Pin

For use with #108 Hanging Shackle Bale

S	P	Weight in lbs.
7/8	1	2
1	1 1/8	2.5
1 1/8	1 1/4	3
1 1/4	1 3/8	4
1 3/8	1 1/2	5
1 1/2	1 5/8	5.5
1 5/8	1 3/4	7
1 3/4	2	10.5
2	2 1/4	14

2 1/4 thru 3" Available on request

110 Flush Pin Shackle

Pin threads into the shackle, hole will accommodate a 1/2" drive.

S	P	J	R	WLL (Tons)	Weight in lbs.
5/8	3/4	1	2 1/4	6	1.5
3/4	7/8	1	1 7/8	9	2
7/8	1	1 1/8	2	12	2.5
1	1 1/8	1 1/4	2 1/4	16	3.5
1 1/8	1 1/4	1 3/8	2 3/4	18	6
1 1/4	1 3/8	1 1/2	3 1/4	21	7
1 3/8	1 1/2	1 5/8	4	26	9
1 1/2	1 5/8	1 3/4	4 1/4	31	11
1 5/8	1 3/4	1 7/8	4 5/8	35	14
1 3/4	2	2 1/4	5	41	17
2	2 1/4	2 1/2	6	52	28

110 S Flat Bottom / Flush Pin Shackle

S	P	J	R	WLL (Tons)	Weight in lbs.
3/4	7/8	1 1/8	2 3/4	9	3
7/8	1	1 1/4	2 3/4	12	4
1	1 1/8	1 1/4	3 1/4	16	5

112 Arch Hook Shackle

Shackle has a slight bell in the bale.

S	P	J	B	R	Weight in lbs.
3/4	7/8	1	1 1/8	1 7/8	2
1	1 1/8	1 1/4	1 3/8	2 1/4	4.5
1 1/8	1 1/4	1 3/8	1 1/2	2 3/8	6
1 1/4	1 3/8	1 1/2	1 5/8	2 3/4	8
1 3/8	1 1/2	1 5/8	1 3/4	3	12
1 1/2	1 5/8	1 3/4	2 1/8	3 5/8	13.5

144 Spreader Bar Shackle

Size (Bale)	Weight	Inside Jaw Width
1	14	1 1/2
1 1/2	30	2 1/2

164 Montelius Shackle

Forged flap helps prevent choker loss. For use with #113 style arch hook.

Size	Weight
1	7
1 1/8	9
1 1/4	10

174 Butt Shackle

These shackles are dimensionally designed to fit into all popular types of Butt Rigging assemblies. High alloy shackle bale is specially designed, forged and heat treated for maximum wear and strength characteristics. Fine or coarse threaded pin option.

S	P	J	R	WLL (Tons)	Weight in lbs.
3/4	7/8	15/16	2 1/2	9	3
7/8	1	1	2 3/4	12	4.75
1	1 1/8	1 3/16	3 1/4	16	5.75
1 1/8	1 1/4	1 3/8	3 3/4	18	8.25
1 1/4	1 3/8	1 1/2	4	21	10
1 3/8	1 1/2	1 11/16	4 1/4	26	14.75
1 1/2	1 5/8	1 13/16	4 1/2	31	19
1 5/8	1 3/4	1 15/16	5	35	21
1 3/4	1 7/8	2 1/8	5 1/2	41	23

113 Cross Eye (Reverse Eye) Arch Hook

Specify arrow, "T", or plain point.

Size	Line Size	Weight in lbs.	Shackle Size
1¼	½	5	¾
1½	¾	6	1
1⅝	¾	7	1
1¾	⅞	9	1⅛
1⅞	⅞	12	1¼
2	1	15	1¼
2⅛	1	18	1⅜
2¼	1⅛	20	1⅜
2½	1¼	25	1⅜

113 S Swivel Arch Hook

T-Point only for use with 101 7/8".

Size	Weight in lbs.
1¾	16

114 Straight Eye (Regular Eye) Arch Hook

Specify arrow, "T", or plain point.

Size	Line Size	Weight in lbs.	Shackle Size
1¼	½	5.5	¾
1½	¾	7	1
1⅝	¾	8	1
1¾	⅞	10	1⅛
1⅞	⅞	13.5	1¼
2	1	16	1¼
2⅛	1	19	1⅜
2¼	1⅛	21.5	1⅜
2½	1¼	26.5	1⅜

115 Line Hook

Specify cross-eye or straight-eye

Material Size	Line Size	Hole Size	Jaw Opening	Weight
¾	¼	½	⅞	.75
⅞	⅜	⅝	1	1
1	⅜	¾	1⅛	2
1⅛	7/16	⅞	1¼	2.5
1¼	½	1	1⅜	4
1⅜	9/16	1⅛	1½	5
1½	⅝	1⅛	1⅝	6
1¾	¾	1¼	1¾	8.5
2	⅞	1⅜	2	14

116 Flat Choker Hook

Size	Line Size	Hole Size	Weight in lbs.
½x1½	⅜	⅝	1
⅝x2	½	11/16	2
¾x2	⅝	¾	3
⅞x2½	¾	⅞	5
1x3	⅞	1	7
1⅛x3½	1	1⅛	10
1¼x4	1⅛	1¼	15
1½x5	1¼	1½	22

Note: Order by Line Size

Line sizes are intended for regular wire rope, not swaged wire rope.

117 Buzzard Hook

Latch is designed only to retain line when not under load.

Size	Line Size	Weight in lbs.
1⅜	½	10
1½	⅝	12
1¾	¾	14
2	⅞	16
2¼	1	22
2½	1⅛	30

119 Swamp Hook

Complete with round ring.

Size	Ring Size	Overall Length	Weight in lbs.
1	⅝	14	6
1⅛	⅝	15	6.5
1¼	¾	16	7
1½	⅞	19	12
1¾	1	23	17
2	1⅛	29	20

131 Strawline Hook

Size
¼
5/16
⅜
7/16
½

132 Sorting Hook

Material Size	Line Size	Hole Size	Jaw	Weight
1⅛	7/16	⅞	3	3.5
1¼	½	1	3	4.5
1½	⅝	1⅛	3	6

143 Drawbar Hook

Size	Weight	Pin Size
1½	9	1⅛
1¾	17	1¼
2	21	1⅜
2¼	32	1¾
2½	41	1¾
3	62	2

151 Trailer Loading Hook

Complete with 1" No. 102 Bolt Type Pin Shackle

Size	Weight in lbs.	WLL
1½	19	8 Ton
1¾	24	11 Ton

156 Elongated Eye Arrow Point Arch Hook

Size	Weight in lbs.	Shackle
1¾	9	1⅛
2	17	1¼
2¼	20	1⅜

161 Pelican Hook

Size	Weight
½	4
⅝	6
¾	8
⅞	12
1	17

171 Double Sister Hook

Size	O.A.L	Weight
⅝	14	10

175 Ferrule Hook

A highly popular arch hook in Canada, this hook is 100% forged of high alloy steel and carefully heat treated to minimize straightening and breakage down time.

Size	Line Size	Weight in lbs.
1½	⅝	15
1¾	¾	18
2	⅞	25
2¼	1	30
2½	1⅛	40

179 Railroad Sill Hook

Size	Weight in lbs.
1⅜	20
1½	24

181 Rope Eye Tow Hook

Size	Hole Size	Jaw	Weight
⅞	1⅞	2½	3
1⅛	1⅞	2½	4
1¼	2¼	3¼	5.5

Line sizes are intended for regular wire rope, not swaged wire rope.

120 Alloy Ring

Size Dia.	I.D.	Weight in lbs.	WLL (Tons)
½	2¾	.75	1.25
⅝	3	1	2
¾	3½	1.75	3.5
⅞	3¾	2.5	5
1	4	3.5	6
1	4½	3.75	6
1⅛*	4¾	5.25	6.5
1¼*	5	7	7
1½*	6	12	8.5
1¾*	7	18	12

*Welded

121 Oval Repair Link

Single piece, requires bending to close prior to welding. Alloy steel: weld only by approved procedures.

Size	Weight
⅜	.25
½	.5
⅝	.75
¾	1

122 Weld Repair Link

Piece comes with plug for welding. Alloy steel: weld only by approved procedures.

Size	Inside Dimensions	Weight in lbs.
½	1⅛x2¼	.5
⅝	1¼x3	.75
¾	1⅜x3⅛	1.25
⅞	1½x3½	2.25
1	1⅝x4¼	3.25
1⅛	2x4¾	3.75
1¼	2⅛x5	6
1⅜	2¼x5½	6.5
1½	2½x6	7.5
1¾	2¾x6½	15

139 Solid Welded Link

Size	Inside Dimensions	Weight in lbs.	WLL (Tons)
½	1⅛x2¼	.5	1.5
⅝	1¼x3	.75	2
¾	1⅜x3⅛	1.25	2.5
⅞	1½x3½	2	4
1	1⅝x4¼	2.75	5
1⅛	2x4¾	3.75	6
1¼	2⅛x5	6	7
1½	2½x6	10	12
1¾	2¾x6½	15	16

123 Loading Tong

Channel leg; provided with leg type shackles designed for use with the No. 104 Top Tong Shackle.

Spread	Weight in lbs.
28	48
32	60
37	80
43	111
48	126
54	148
65	168
72	229

124 Piling Tong

Channel leg, links and ring on legs.

Spread	Weight in lbs.
12	13
16	13
18	16
22	20
24	20

125 Skidding Tong

Utility type with hex leg.

Size	Weight in lbs.	Spread
7/8	10	14
1	14	16
1 1/8	21	20
1 1/4	26	24
1 1/2	38	28
1 3/4	47	32

163 Pine Skidding Tong

Square points, leg rings.

Spread	Weight
12	25
14	27
16	30
18	32
21	36
24	41

166 Channel Leg Skidding Tong

Extra Heavy Channel Leg.

Spread
18
24
28

Replace or reface (grind) mushroomed hammers, mauls, and wedges to prevent dangerous flying steel splinters.

127 Rigger's Hammer

Weight in lbs.
5.5

128 Splicing Hammer

A true "soft" hammer with a broad striking face: large blacksmith handle hole.

Size/Weight	
3	w/o handle
3	with 18" handle
4	w/o handle
4	with 18 handle

146 Sledge Hammers

"Soft" hammers only. 36" Handle.

Size
6
8
10
12
20

147 Splitting Maul

Size
6
8
10

148 Oregon Pattern Splitting Wedge

Size
4
6
8

149 Cedar Pattern Splitting Wedge

Size
6
8

152 Splitting Froe

Special alloy steel to resist fatigue and breakage.

	Weight in lbs.
18" Froe W/Handle	8

158 Froe Hammer

Aluminum head.

Weight
10

160 Top Maul

Alloy steel; available in special sizes and shapes not shown.

Size
4
5
6
8

162 Steel Falling Wedge

Size
6
8
10

167 Flagging Hammer

Weight
1½

173 Branding Hammer

Forged of C-1018 Steel. The hole is punched to fit our #128 blacksmith handle and most 36" sledge handles. 2¼" square face, weight W/O handle is 3½ lb. Special face sizes quoted on request.

SWIVELS

118 Buzzard Hook

With shackle swivel. Latch is designed only to retain line when not under load.

Size	Line Size	Weight in lbs.
1⅜	½	17
1½	⅝	22
1¾	¾	30

118 I Integral Swivel Buzzard Hook

Size	Line Size	Weight in lbs.
1⅜	½	12
1½	⅝	15
1¾	¾	17

Line sizes are intended for regular wire rope, not swaged wire rope.

133 Shackle Swivel

Size	Weight	Line Size
⅝	4	⅜
¾	4.5	½
⅞	7	⅝
1	12	¾
1⅛	16	⅞
1¼	18	1
1⅜	21	1⅛
1½	28	1¼

134 Swivel Line Hook

Size	Weight	Line Size
1¼	6	½
1½	11	⅝
1¾	18	¾

135 Iuka Swivel

Used at the head of the butt rigging on the mainline.

Size	Weight
Light	29
Junior	47
Standard	84

136 Dumm 3-Way Swivel

Used at the tail of the butt rigging for the haulback.

Size	Weight
Light	37
Junior	61
Standard	90

137 Strawline Swivel

Size	Weight
⅜-7/16	.75

159 Dropline Swivel

Replaces the eye on the end of the drop line, allowing easy hook-up with a quick-way ferrule.

Size	Weight	Hook Size	
⅝-¾	6.5	1¼	113
⅞-1	12	1¾	113

169 Haul Back Swivel

For quick easy attachment.

Material Size	Line Size	Weight
¾	½	7

178 Line Swivel

Swivel Size	Weight
½	1.5
⅝	2
¾	3
1	7
1⅛	10

126 Guyline Sleeve

With type #102 safety pin.

Size	Weight
7/8	8
1	11
1 1/8	15
1 1/4	18
1 3/8	25
1 1/2	27
1 3/4	38

126 S Skyline/Mainline Sleeve with Safety and K.O. Pin

Safer attachment of Skylines/Mainlines to a tailhold. A bolt installed above the Knock-Out Pin helps to retain jaw.

Size	SWL-Tons
7/8	12
1	16
1 1/8	18
1 1/4	21
1 3/8	26
1 1/2	31
1 5/8	35
1 3/4	41
2	52

129 Pass Chain

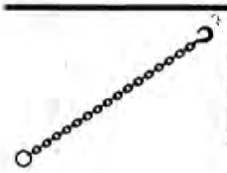

Single leg complete with straight eye hook (cross eye hook available on request.) High test chain, alloy or request.

Size	Weight in lbs.
1/2x4 1/2	17

130 Pass Chain

Double leg complete with straight eye hook (cross eye hook available on request.) High test chain, alloy on request.

Size	Weight in lbs.
3/8x9	16

138 Powder Bar

Length	Weight
65	17

140 Single Tree Iron

Size	Weight
1 x 3 x 36	40
1 1/4 x 4 x 42	71

141 Double Tree Iron

Size	Weight
1 x 3 x 36	53
1 1/4 x 4 x 42	97

142 Riggers Bar

Length	Weight
45	18

154 Dropline Socket

For use with #117 Buzzard Hook.

Size	Hook	Pin Dia.
5/8-3/4	1 3/8	7/8
3/4-7/8	1 1/2	1
7/8-1	1 3/4	1 1/8

155 Logging Toggle

Alloy construction: Forged and heat treated lock. Available with special alloy rings.

Weight in lbs.
9

157 Chain Binder Minder

Welded construction w/heavy handle. 32" overall length with point.

	Weight in lbs.
Unit W/Point	7
W/O Point	6

165 Peeling Bar

High tensile alloy steel.

Size	Weight
5'	15
6'	17

168 Staple Bar

High alloy forging for removing log staples.

Weight	O.A.L.
14	48"

176 Ring's Toggle

New Choker Handling system for carriage logging. Allows choker pre-setting. Speeds yarding.

Rope	Weight
5/8-3/4	12
7/8-1	18

CONTACT:

SKOOKUM®
Since 1890

P.O. Box 280
Hubbard, Oregon 97032

(503) 651-3175
800-547-8211
FAX: (503) 651-3409

AN ULVEN COMPANY

Printed in USA 4/99 P/H

Conditions of Sale & Limited Warranty

NOTICE TO CUSTOMER:
Please read carefully. These terms and conditions contain disclaimers of warranties and strict limitation of liability and remedies.

Manufacturer warrants to the original wholesale or OEM purchaser and/or to the original retail purchaser only that the goods, equipment or merchandise described herein will be free from defects in material and workmanship for a period of twelve (12) months from date of manufacturer's shipment. Should the goods, equipment or merchandise prove defective within such twelve (12) month period, RopeMaster/Skookum will, at its option, repair or replace the same when returned to its plant, charges prepaid. If RopeMaster/Skookum is given written notice of any such claimed defect promptly and is submitted, freight prepaid, within such twelve (12) month period for examination. Repair and/or replacement at the option of RopeMaster/Skookum shall be the sale and exclusive remedy of the buyer for breach of the above express warranty.

Except as expressly set for herein, RopeMaster/Skookum makes no warranty either express or implied, that the goods, equipment or merchandise shall be merchantable or fit for any particular purpose or use, nor does it make any other warranty, express, implied or statutory. RopeMaster/Skookum shall have no liability for incidental, consequential, special, general or other damages arising from the use of its product including, but not limited to, failure of the goods, equipment, or merchandise to perform any general or particular function or purpose whether such damage or failure is due to mistake or deficiency in any design, formula, plan specifications, advertising material, printed instructions, defective materials, defective or improper assembly or otherwise; the sole liability of RopeMaster/Skookum being to repair or replace, at its option, defects in material or workmanship as stated in the preceding paragraph.

RopeMaster/Skookum shall not have any responsibility or liability for damage in shipment, during assembly, installation, erection, or that arising from accidents, abuse or improper operation of the goods, equipment or merchandise.

These terms and conditions shall supersede and, in case of conflict, shall have control over any other terms or provisions in any oral or written purchase order or other document pertaining to the goods, equipment or merchandise described herein, including any negotiations between parties or as suggested by any product catalog or descriptive literature. Nor does any distributor, dealer, franchisee, independent sales representative or other person, firm or corporation have authority to assume any other obligations or liability on behalf of RopeMaster/Skookum, or to waive, modify or change these terms and conditions. We agree, in performing the work required by any purchase order, not to discriminate against any worker because of race, creed, color, sex or national origin.

In the event of stoppage or partial stoppage of our plants or shipments of the items ordered by the customer due to causes beyond our control (such as, but not limited to: strikes, differences with workmen, fires, floods, accidents, scarcity of labor, materials, power, fuel or transportation difficulties, war — whether in this country or abroad, government regulations, orders or proclamations, laws, acts of public enemies, mobs or rioters, or acts of God) deliveries hereunder may be suspended or partially suspended, during the continuance of such interruption.

Warranty Disclaimer: The Warranty, whether expressed or implied, shall be void if parts are altered or repaired by other than Skookum, or by their approved agent. Approval shall be in writing and required before alterations or repairs are done.

By acceptance of our sales order acknowledgement copy you accept all the terms and provisions heretofore set forth and agree that the delivery of the merchandise described in said order shall be subject to no other terms and conditions whatsoever unless additional terms are made the subject of negotiation and are covered by separate written acceptance by us.

Receipt of acknowledgement by you without written objection to us within thirty days from the date of receipt of the merchandise described in said order shall constitute an acceptance by you of the terms hereof and an agreement that the delivery of the merchandise described in said order is subject to no other terms than those stated in this acceptance.

The provisions of this instrument shall be construed in accordance with, and the rights and liabilities of both the manufacturer and purchaser shall be controlled by the laws of the state of Oregon, USA, in force as of the date of shipment by the manufacturer.

TERMS — Miscellaneous

Prices and discounts are subject to change without notice. Orders accepted with the understanding that price and discounts prevailing at the time of shipment shall apply. All prices FOB Hubbard, Oregon. *For individual orders of 500 lbs (net weight) or over, on standard product items only, full freight is allowed** not to exceed the LTT truck rate to destination in the continental USA.

All shipments under 500 lbs will be shipped freight collect.

For Canadian shipments, freight is allowed to the border. On Alaskan shipments, freight is allowed to Seattle or an equivalent rate point. On air freight shipments, surface allowance normally cannot be granted due to special handling and palletizing.

Shipment descrepancies must be documented. Notification of discrepancies in quantities of items shipped must be made within 15 days of receipt of shipment.

Material may not be returned without prior written permission. Requests to return material should include RopeMaster/Skookum's original invoice number.

Any items not catalogued or items not shipped within the preceding 90 days are non-returnable. Items to be returned must be in new and unused condition.

Non-catalogued items or special engineered products cancelled will be subject to a cancellation charge equal to the greater of the cost of labor and material incurred by the company and no less than 25% of net order value.

For standard items returned, *a minimum restocking charge the greater of 25% or $50 shall be made*, with additional charges as required for repairing items not received in good condition. *Returned items must be freight prepaid,* and all transportation costs previously assumed by RopeMaster/Skookum will be charged back.

*Freight allowances given shall not shift FOB point so as to risk loss or damage.

**** Specialty items are FOB Hubbard, unless otherwise noted.**

Blocks — Fairleads

Construction — Marine

A set of four 36" 7-SHEAVE BLOCKS rated at 500-ton per block, used in setting special anchors weighing up to 2,000 tons in water depths up to 230 ft.

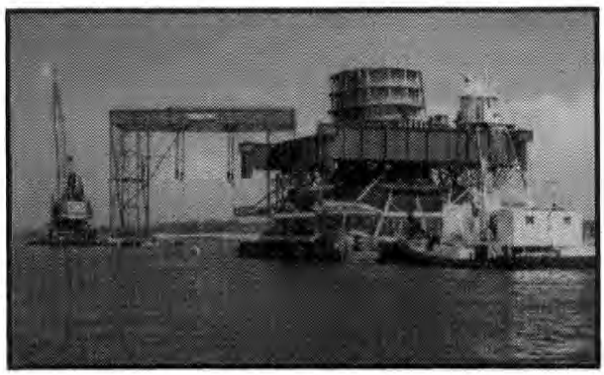

Set of SPECIAL DESIGNED BLOCKS rated at 250-ton used in setting heavy concrete forms for the Interstate 205 bridge spanning the Columbia River between Oregon & Washington.

Specializing in:
—Building for performance
—Meeting delivery requirements

International Reputation

Custom designs:
—Effective engineering
—For special application

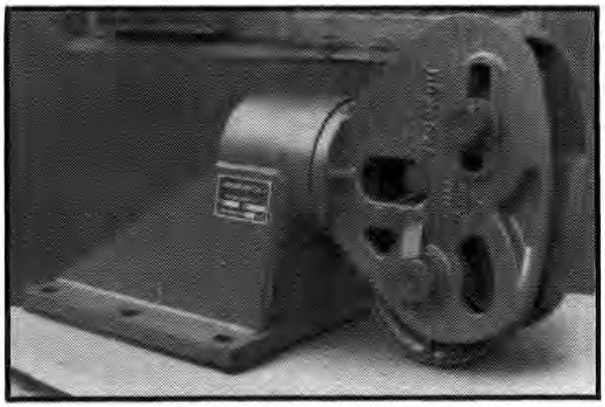

Special marine MOORING FAIRLEAD designed to handle 1¼" diameter wire rope and/or 3½" diameter nylon/synthetic mooring lines.

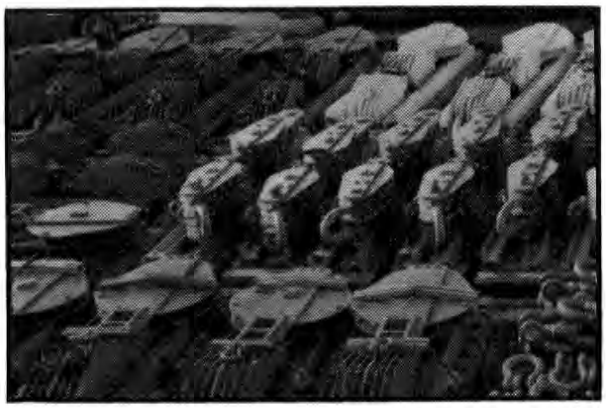

MULTIPLE SHEAVE BLOCKS and SUPER CAPACITY SHACKLES played a big part in completion of 1¼ mile European suspension bridge with pier foundations 275 ft. below high tide level.

Where there is an unusually tough and demanding job — you will find **Rope Master/Skookum** products with a world-wide reputation for high standards of engineering and manufacturing quality.

SKOOKUM®
Since 1890
AN ULVEN COMPANY

Post Office Box 280 ♦ Hubbard, Oregon 97032 ♦ (503) 651-3175 ♦ Toll Free (800) 547-8211 ♦ Fax (503) 651-3409